MARKLEY FARM PROPERTY

PRELIMINARY LAND DEVELOPMENT

TOWNSHIP of WEST NORRITON
MONTGOMERY COUNTY – PENNSYLVANIA 19403

PROJECT SHEET INDEX

SHEET No.:	SHEET DESCRIPTION:
1 of 34	COVER – INDEX SHEET
2 of 34	OVERALL PROJECT – RECORD PLAN
3 of 34	LAYOUT PLAN – DEVELOPMENT AREA A
4 of 34	LAYOUT PLAN – DEVELOPMENT AREA B
5 of 34	NEIGHBORHOOD PLAN (400 FT. Radius)
6 of 34	EXISTING FEATURES & DEMOLITION PLAN
7 of 34	GRADING and DRAINAGE PLAN – DEVELOPMENT AREA A1
8 of 34	GRADING and DRAINAGE PLAN – DEVELOPMENT AREA A2
9 of 34	GRADING and DRAINAGE PLAN – DEVELOPMENT AREA B1
10 of 34	GRADING and DRAINAGE PLAN – DEVELOPMENT AREA B2
11 of 34	LANDSCAPING & LIGHTING PLAN – DEVELOPMENT AREA A
12 of 34	LANDSCAPING & LIGHTING PLAN – DEVELOPMENT AREA B
13 of 34	OPEN SPACE and RIPARIAN LANDSCAPING PLAN
14 of 34	STRUCTURE SCHEDULES & CONSTRUCTION DETAILS – SHEET 'A'
15 of 34	CONSTRUCTION DETAILS – SHEET 'B'
16 of 34	CONSTRUCTION DETAILS – SHEET 'C'
17 of 34	CONSTRUCTION DETAILS – SHEET 'D'
18 of 34	PLAN and PROFILE: CHESTNUT AVENUE
19 of 34	PLAN and PROFILE: OAKLAND DRIVE (Sta 0+00 to 6+50)
20 of 34	PLAN and PROFILE: OAKLAND DRIVE (Sta 6+50 to 13+00)
21 of 34	PLAN and PROFILE: PROPOSED ROAD 'A'
22 of 34	PLAN and PROFILE: PROPOSED ROAD 'A' & 'B'
23 of 34	PLAN and PROFILE: PROPOSED ROAD 'C' & 'D'
24 of 34	PLAN and PROFILE: CROSS–LOT UTILITY
25 of 34	PLAN and PROFILE: CROSS–LOT UTILITY
26 of 34	PLAN and PROFILE: CROSS–LOT UTILITY
27 of 34	EROSION and SEDIMENTATION CONTROL PLAN – AREA A
28 of 34	EROSION and SEDIMENTATION CONTROL PLAN – AREA B
29 of 34	EROSION and SEDIMENTATION CONTROL PLAN – AREA C
30 of 34	EROSION and SEDIMENTATION CONTROL NOTES
31 of 34	EROSION and SEDIMENTATION CONTROL SPECIFICATIONS 'A'
32 of 34	EROSION and SEDIMENTATION CONTROL SPECIFICATIONS 'B'
33 of 34	POST CONSTRUCTION STORMWATER MANAGEMENT (PCSM) PLAN
34 of 34	POST CONSTRUCTION STORMWATER MANAGEMENT SPECIFICATIONS

RECORD NOTE:

Plan Sheets 2 thru 4 of 36) are to be recorded with the County Recorder of Deeds Office. Plan Sheets 1 and 5 thru 36 inclusive shall be on record with with West Norriton Township and are to be considered a part of the Approved Final Plan as if Recorded with same.

SITE DATA SCHEDULE

GROSS Tract Area:	2,420,271.28 Sq. Ft.	55.5618 Acres
Area w/In Public R.O.W.:	28,030.78 Sq. Ft.	0.6435 Acres
NET Tract Area:	2,392,240.50 Sq. Ft.	54.9183 Acres
Total Proposed Lots:		
Total Proposed Open Space:		24.1733 Acres
Total Length of New Trails:		3094 L.F.
Total Length of New Roads:		5141 L.F.
DEVELOPMENT AREA A:		
Lots W/In Area A:		40 Lots
DEVELOPMENT AREA B:		
Lots W/In Area B:		39 Lots

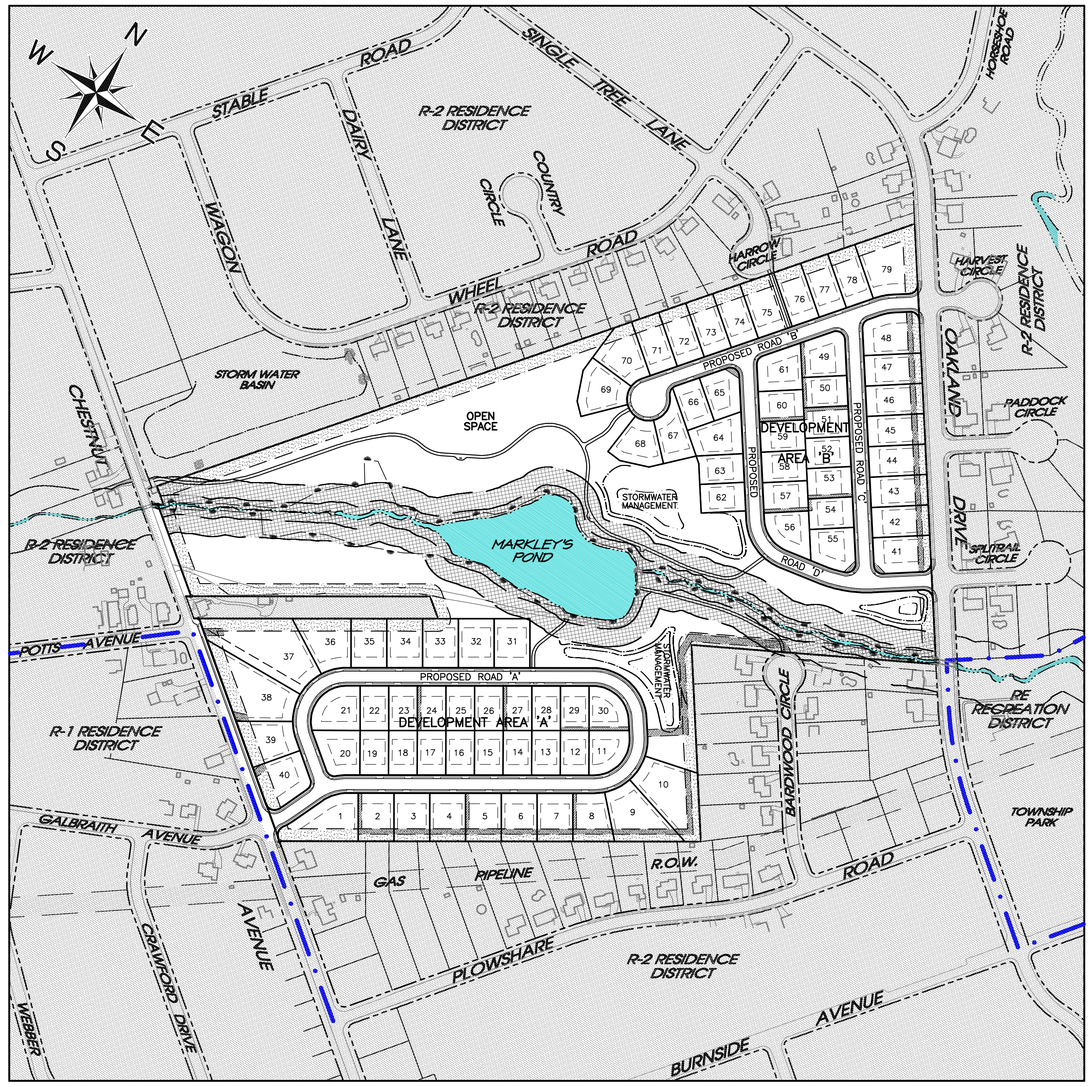

SITE LAYOUT

200' 100' 0' 200'

SCALE: 1" = 200' – 0"

PROJECT APPLICANT:

MIKELEN, LLC
c/o Mr. Leonard DelGrippo
2965 West Germantown Pike
Norristown, PA 19403
Phone: (610) 539 – 8088

PROJECT CONSULTANTS:

Civil Engineering:

Woodrow & Assoc., Inc.
Municipal / Civil Consulting Engineers
1108 North Bethlehem Pike
Suite 5
Lower Gwynedd, Pennsylvania 19002
Phone: (215) 542 – 5648

Landscape Design:

InFocus Planning
Rachel Sclan Vahey, ASLA, LEED AP
Philadelphia, Pennsylvania 19118
Phone: (267) 336 – 7411

File Name: G:\2011\11–0410D\11–0410D.pro	
Date: NOV 06, 2015	Sheet No.: 1 OF 34
Scale: AS NOTED	
Job No: 11–0410 D	
Layer List: 01_Cover	

Project No: 11–0410 D Project Name: MARKLEY FARM PROPERTY Print Date: Nov 2, 2015 (15:04)

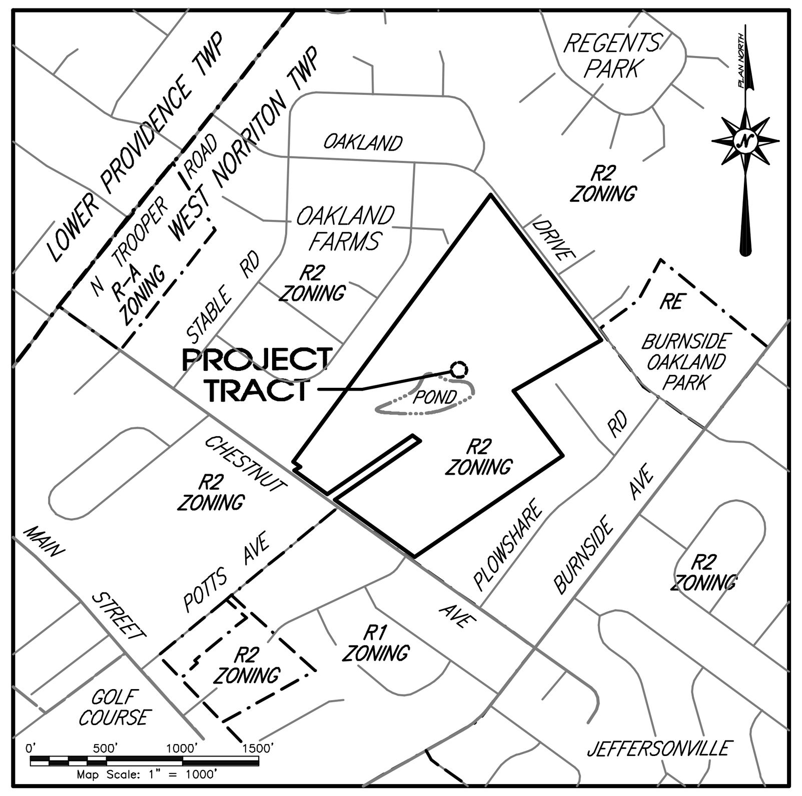

LOCATION MAP

ZONING and SITE DATA SCHEDULE

Zoning District: R2 Residence District (Chapter 27, Part 5)			
Item	Section	Requirement	Plan Provided [1]
Permitted Use	504.A	Cluster Subdivision of Lots containing (1) Single-Family detached dwelling by Conditional Use	
Tract Area	505.A	5 Contiguous Acres	55.5618 Acres
Minimum Common Open Space	505.F(1)	40 % of Tract Area	43.51 % (24.1733 Acres)
Lot Area (Min)	505.F(2)(a)	10,000 Sq. Ft.	10,000 Sq. Ft.
Lot Width (Min)	505.F(2)(b)	65 Ft. @ Bldg Line	80.0 Ft. @ Bldg Line
Lot Width (Average)	505.F(2)(c)	80 Ft. @ Bldg Line	106.9 Ft. @ Bldg Line
Yard Setbacks			
Front	505.F(2)(d)	30 Ft.	30 Ft.
Side	505.F(2)(e)	10 Ft.	10 Ft.
Rear	505.F(2)(f)	25 Ft.	25 Ft.
Accessory Bldg	505.F(2)(g)	In Rear Yard Only	In Rear Yard Only
Height (Building)			
Principal Building	505.F(2)(h)(i)	35 Ft.	35 Ft.
Accessory Building	505.F(2)(h)(ii)	20 Ft. (1 Story)	20 Ft. (1 Story)
Maximum Building Coverage	505.F(2)(i)	30 % of individual lot	30 % of individual lot
Perimeter Buffer	505.F(2)(j)	35 Ft.	35 Ft.
Gross Density	505.F(2)(l)	Based on Yield Plan (79 Units)	79 Units Proposed

[1] Refer to plan sheets 3 and 4 of 34 for detailed layout of individual lots.

SITE DATA SCHEDULE

GROSS Tract Area:	2,420,271.28 Sq. Ft.	55.5618 Acres
Area w/In Public R.O.W.:	28,030.78 Sq. Ft.	0.6435 Acres
NET Tract Area:	2,392,240.50 Sq. Ft.	54.9183 Acres
Total Proposed Lots:		79
Total Proposed Open Space:		24.1733 Acres
Total Length of New Trails:		3094 L.F.
Total Length of New Roads:		5141 L.F.

PROJECT WAIVERS LIST:

The following Waivers from the West Norriton Subdivision and Land Development Ordinance are sought for this Land Development Project.

1. 22–515: Required Street Trees – Project is deficient a total of 52 required Street Trees.

PLAN FEATURES LEGEND

- Tract Boundary Line
- Legal Right–of–Way Line
- Existing Roadway Centerline
- Existing Drive / Paving Limit
- Mapped Wetlands Limits
- Zoning District Boundary

GENERAL NOTES

Base Existing Features and Survey Notes

1. The project site is identified as:
   - Record Owner: DORIS Y & RONALD W MARKLEY REVOCABLE TRUST
   - Site Address: 2325 Chestnut Avenue, Norristown, PA 19403–3036
   - Block / Unit: 001 / 007
   - Tax Parcel No.: 63–00–01108–008
   - Deed Bk / Page: 5658 / 2573
   - Gross Area: 55.5618 Acres
2. A Metes and Bounds survey was performed by Woodrow & Associates, Inc. The survey was performed without benefit of a Title Report and was prepared from documents of record. This property may be subject to additional rights of others that might be listed in a Title Report. This survey was prepared during the month of May, 2015.
3. Topography illustrated upon this plan taken from a field survey performed by Woodrow & Associates, Inc., during the month of May 2015. It is supplimented with data obtained from the Pennsylvania Spatial Data Access online mapping site, which was aquired in connection with the PAMAP Lidar Program and was collected in 2008. The Elevation Datum is NGVD 1988.
4. This plan was prepared utilizing the following references:
   a. Tax maps and deeds of record as obtained from the Montgomery County Recorder of Deeds and Tax Assessors Offices, Norristown, PA.
   b. Existing Soils classifications and mapping has been plotted data obtained from the USDA–NRCS Web Soil Survey (WSS) web site.
   c. Site Flood Plain information has been obtained from the FEMA Map Service Center web site (http://msc.fema.gov). Community Panel 420711–0244 E (Dec 19, 1996)
   d. Wetlands illustrated were field mapped by John Szczepanski, PhD, Nova Consultants (Jan. 2013). Wetlands flagging field located by Woodrow & Assoc., Inc.
   e. Ultimate right–of–way information illustrated taken from West Norriton Township Subdivision Ordinance section 503.1.C(1)(b)(2)
   f. West Norriton Township Zoning Map dated November 12th, 2001.
   g. Aerial images provided by Google Earth and Delaware Valley Regional Planning Commission.
5. All contractors working on this project shall comply with the requirements of PA Act 287 of 1974 as amended by PA Act 181 of 2006 (Pennsylvania One Call system). All contractors working on this site shall obtain a PA One Call serial number for construction purposes not less than three (3) nor more than ten (10) working days prior to construction.
   - Serial No.: 20151130184 West Norriton Twp–Oakland Drive (For Design) 04/23/2015
   - Serial No.: 20151130167 West Norriton Twp–Chestnut (For Design) 04/23/2015
6. Existing subsurface utility information illustrated on these plans are based upon visual field inspection. Information pertaining to the size, location, depth, etc. of subsurface utilities is approximate in nature and has been obtained as an aid for the project design. There is no expressed or implied agreement that utility size, location, depth, etc. as shown, exists between explored locations. Accordingly, utility information shown should not be relied upon for construction purposes. It is incumbent upon the contractor to verify subsurface utilities prior to excavation.

Development Notes:

7. The contractor shall ensure that all necessary permits and approvals have been obtained prior to commencement of any site construction activities.
8. Any/all storm water conveyance system(s) and detention facilities shown on these plans are a basic and perpetual part of the storm water management system for this Township, and as such, are to be protected, maintained and preserved in accordance with the approved final plans. The Township and/or its agents may reserve the right and privilege to enter upon such lands from time to time for the purpose of inspection of said storm water management system in order to determine that the structural design and integrity are being maintained.
9. Construction materials and procedures shall follow Pennsylvania Department of Transportation Specifications and Standard Drawings (latest edition).
10. Nothing shall be permitted to be set on, placed or planted within, the area of any utility or storm water easement except lawns or suitable low ground cover.
11. The proposed finished grading shown on this plan has been based on the proposed building(s) finished floor elevations and has been used to design the storm water management facilities. The contractor shall comply with the grading scheme indicated unless otherwise approved by the Township and Design Engineers.
12. Erosion and sedimentation control measures shall be in place and functional prior to any earth disturbance or grading work.
13. A minimum of six (6) inches of clean topsoil shall be provided on all lawn and planting areas.
14. Site grading shall be performed in accordance with these plans. The contractor shall be re–sponsible for removing and replacing all soft, yielding or unsuitable materials and replacing with suitable materials. All excavated or filled areas shall be compacted to 95% of modified proctor maximum density per A.S.T.M. Test D–1557. moisture content at time of placement shall be no more than 2% above nor 3% below optimum. contractor shall submit a compaction report prepared by a qualified soils engineer, registered within the state where the work is performed, verifying that all filled areas and subgrade areas within the building pad area and areas to be paved have been compacted in accordance with these plans.
15. Subbase material for sidewalks, curb, or asphalt shall be free of organics and other unsuitable materials. Should subbase be deemed unsuitable, subbase is to be removed and filled with approved fill material compacted to 95% optimum density (as determined by modified proctor method).
16. The minimum slope in grassed areas shall not be less than 2% and the minimum in paved areas shall not be less than 1
17. Erosion control matting shall be provided on all earth slopes at 3:1 or greater.
18. Contractor to ensure compliance with ADA regulations.
19. The area between the project Title Line and the Ultimate Right–of–Way is offered in perpetuity for dedication to the agency having jusisdiction over said right–of–way at time of dedication.
20. MULTI–PURPOSE TRAIL: The multu–purpose trail illustrated on thes eplans is to be constructed by the developer and an easement is to be accepted by the Township for use by the public and maintenance.

Utility Notes:

21. Refer to architectural drawings for exact building utility connection locations. Service sizes to be determined by Architect.
22. Contractor to confirm the horizontal location and vertical elevation of utilities being crossed or connected into prior to construction. The engineer of record shall be informed in writing of any discrepancies or clearance issues prior to proceeding with construction.
23. Clean outs and curb boxes within the paved areas must have traffic loading frames and covers.
24. Shop drawings and/or literature submittal on equipment/products associated with the sanitary sewer and potable water facilities will be provided to the operator of said facilities for approval prior to fabrication and/or erection.
25. Location of all existing and proposed services are approximate and must be confirmed indepen–dently with local utility companies prior to commencement of any construction or excavation. Sanitary sewer and all other utility service connection points shall be confirmed independently by the contractor in field prior to the commencement of construction. All discrepancies shall be reported immediately in writing to the engineer of record. Construction shall commence beginning at the lowest invert (point of connection) and progress up gradient. Interface points (crossings) with existing underground installations shall be field verified by test pit prior to commencement of construction.
26. This project shall be served by public sanitary sewer and water services.

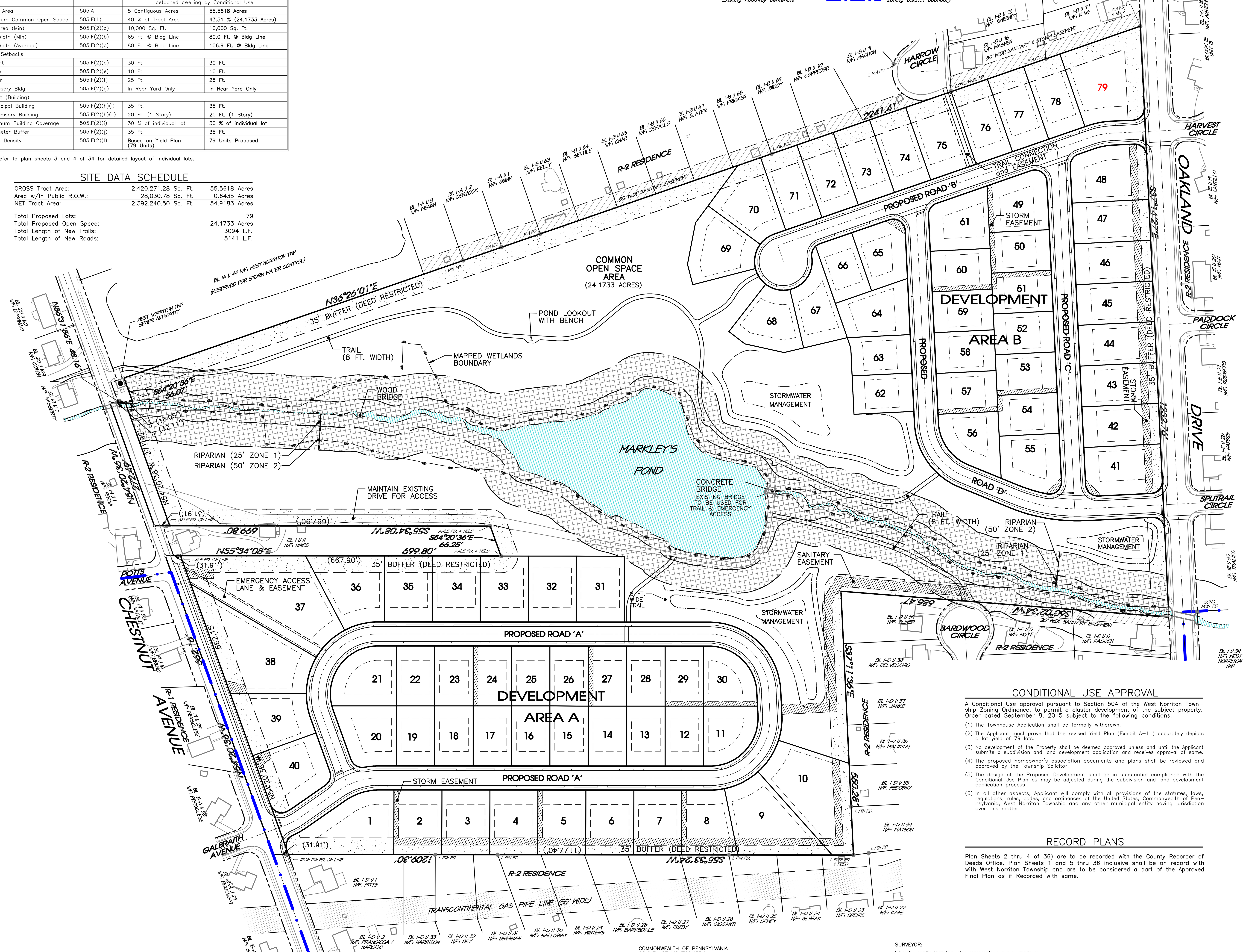

CONDITIONAL USE APPROVAL

A Conditional Use approval pursuant to Section 504 of the West Norriton Town–ship Zoning Ordinance, to permit a cluster development of the subject property. Order dated September 8, 2015 subject to the following conditions:

(1) The Townhouse Application shall be formally withdrawn.

(2) The Applicant must prove that the revised Yield Plan (Exhibit A–11) accurately depicts a lot yield of 79 lots.

(3) No development of the Property shall be deemed approved unless and until the Applicant submits a subdivision and land development application and receives approval of same.

(4) The proposed homeowner's association documents and plans shall be reviewed and approved by the Township Solicitor.

(5) The design of the Proposed Development shall be in substantial compliance with the Conditional Use Plan as may be adjusted during the subdivision and land development application process.

(6) In all other aspects, Applicant will comply with all provisions of the statutes, laws, regulations, rules, codes, and ordinances of the United States, Commonwealth of Pen–nsylvania, West Norriton Township and any other municipal entity having jurisdiction over this matter.

RECORD PLANS

Plan Sheets 2 thru 4 of 36) are to be recorded with the County Recorder of Deeds Office. Plan Sheets 1 and 5 thru 36 inclusive shall be on record with with West Norriton Township and are to be considered a part of the Approved Final Plan as if Recorded with same.

Attest: DORIS Y. MARKLEY TRUSTEE

By: Mr. Scott Markley

________________ Witness

By: ________________ Name: Mr. Scott Markley Title: Authorized Trustee

Attest: TOWNSHIP OF WEST NORRITON

________________ Witness

By: ________________ Name: Ralph Panzullo Title: President, Board of Commissioners

COMMONWEALTH OF PENNSYLVANIA
COUNTY OF MONTGOMERY

On this, the ______ day of ________________, 2014, before me, a Notary Public in and for the Commonwealth of Pennsylvania, the undersigned officer, personally appeared, Scott Markley, who acknowledged himself to be the Executor of the Estate of Doris Y. Markley, and that he in such capacity, being authorized so to do, executed the foregoing instrument for the purposes therein contained.

IN WITNESS WHEREOF, I hereunto set my hand and official seal.

MY COMMISSION EXPIRES: ________________ Notary Public

RECORDER OF DEEDS:

Recorded this_______day of________________ 20___, in the office for the recording of deeds, etc., in and for the County of Montgomery in Norristown, Pennsylvania, in Plan Book _______Page _______.

Recorder: ________________

SURVEYOR:

I hereby certify that this plan represents a survey made by me, that the monuments shown hereon exist as located and that all dimensional and geodetic details are correct.

Registered Surveyor: ________________
Dated: ________

COMMONWEALTH OF PENNSYLVANIA – REGISTERED PROFESSIONAL – KEVIN R. GIBBONS – LAND SURVEYOR – No. 044550–E

MCPC No.:

PROCESSED and REVIEWED. A report has been prepared by the Montgomery County Planning Commission in ac–cordance with the Municipalities Planning Code.

Certified this date: ________________

For the Director

Montgomery County Planning Commission

No.:	DATE:	DESCRIPTION:

REVISIONS

COMMONWEALTH OF PENNSYLVANIA – REGISTERED PROFESSIONAL – TIMOTHY P. WOODROW – ENGINEER – No. 038735–E

SCALE IN FEET (1" = 100'–0")

ONLY PLANS INCORPORATING A RAISED PROFESSIONAL SEAL ARE CONSIDERED TO BE OFFICIAL AND RELIED UPON BY THE USER.

THIS PLAN HAS BEEN PREPARED SPECIFICALLY FOR THE APPLICANT AND PROJECT DESIGNATED HEREON. ANY MODIFICATION, REVISION, DUPLICATION OR USE WITHOUT THE CONSENT OF WOODROW & ASSOCIATES, INC. IS PROHIBITED BY LAW.

© COPYRIGHT 2015 WOODROW & ASSOCIATES, INC. – ALL RIGHTS RESERVED

Parcel Information: TP 63–00–01108–008 Block 1 Unit 7
Deed Bk: 5658 Pg: 2573
Gross Tract: 55.5618 Acres

Record Owner: DORIS Y & RONALD W MARKLEY REVOCABLE TRUST
2325 Chestnut Avenue Norristown, PA 19403

Applicant: MikeLen, LLC
Attn: Len DelGrippo
2965 W. Germantown Pike Norristown, PA 19403

PRELIMINARY PLAN (Not To Be Recorded)

OVERALL PROJECT – RECORD PLAN

MARKLEY FARM PROPERTY

WEST NORRITON TOWNSHIP – MONTGOMERY COUNTY – PENNSYLVANIA

WOODROW & ASSOCIATES, INC.
MUNICIPAL / CIVIL CONSULTING ENGINEERS
1108 North Bethlehem Pike / Suite 5 – Lower Gwynedd – PA 19002
Phone: (215) 542–5648 Fax: (215) 542–5679
Web: www.WoodrowInc.com

Layer List:	Sht02_Record
Plan Date:	NOV 06, 2015
Job No:	11–0410 D
Design Mgr:	J.H.K.
Proj. Mgr:	T.P.W.
Sheet No:	2 of 34

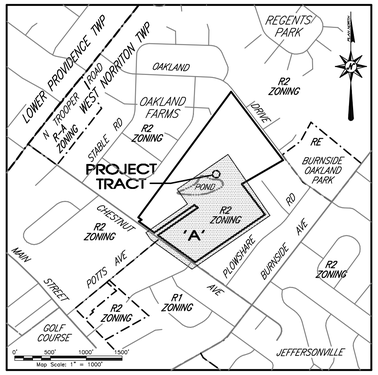

LOCATION MAP

PLAN FEATURES LEGEND

- Tract Boundary Line
- Legal Right-of-Way Line
- Existing Roadway Centerline
- Existing Drive / Paving Limit
- Mapped Wetlands Limits
- Zoning District Boundary

GENERAL NOTES

Base Existing Features and Survey Notes:

Refer to Sheet 6 for all base existing features and survey notes.

Development Notes:

1. The contractor shall ensure that all necessary permits and approvals have been obtained prior to commencement of any site construction activities.
2. Any/all storm water conveyance system(s) and detention facilities shown on these plans are a basic and perpetual part of the storm water management system for this Township, and as such, are to be protected, maintained and preserved in accordance with the approved final plans. The Township and/or its agents may reserve the right and privilege to enter upon such lands from time to time for the purpose of inspection of said storm water management system in order to determine that the structural design and integrity are being maintained.
3. All contractors working on this project shall comply with the requirements of PA Act 287 of 1974 as amended by Act 187 of December 19, 1996. The PA One Call number(s) noted on these plans has/have been obtained by Graf Engineering, LLC. for design purposes only. All contractors working on this site shall obtain a PA One Call serial number for construction purposes not less than three (3) nor more than ten (10) working days prior to construction.
4. Construction materials and procedures shall follow Pennsylvania Department of Transportation Specifications and Standard Drawings (latest edition).
5. Nothing shall be permitted to be set on, placed or planted within, the area of any utility or storm water easement except lawns or suitable low ground cover.
6. The proposed finished grading shown on this plan has been based on the proposed building(s) finished floor elevations and has been used to design the storm water management facilities. The contractor shall comply with the grading scheme indicated unless otherwise approved by the Township and Design Engineers.
7. Erosion and sedimentation control measures shall be in place and functional prior to any earth disturbance or grading work.
8. A minimum of six (6) inches of clean topsoil shall be provided on all lawn and planting areas.
9. Site grading shall be performed in accordance with these plans. The contractor shall be responsible for removing and replacing all soft, yielding or unsuitable materials and replacing with suitable materials. All excavated or filled areas shall be compacted to 95% of modified proctor maximum density per A.S.T.M. Test D-1557. moisture content at time of placement shall be no more than 2% above nor 3% below optimum. contractor shall submit a compaction report prepared by a qualified soils engineer, registered within the state where the work is performed, verifying that all filled areas and subgrade areas within the building pad area and areas to be paved have been compacted in accordance with these plans.
10. Subbase material for sidewalks, curb, or asphalt shall be free of organics and other unsuitable materials. Should subbase be deemed unsuitable, subbase is to be removed and filled with approved fill material compacted to 95% optimum density (as determined by modified proctor method).
11. The minimum slope in grassed areas shall not be less than 2% and the minimum in paved areas shall not be less than 1
12. Erosion control matting shall be provided on all earth slopes at 3:1 or greater.
13. Contractor to ensure compliance with ADA regulations.
14. Lot layout, including Dwelling footprint and driveway configuration, is illustrated to show design compliance. Final Dwelling footprint and Lot configuration to be determined on an individual Lot basis and a Building/Grading Permit plan will be prepared and submitted for each Lot.
15. The Total Impervious Coverage noted in comment 2 of the Lot Area Schedule has been utilized in the design of the Porject Stormwater Management System. If any Lot proposes an additional increase in Lot impervious at time of Building/Grading Permit, additional On-Lot stormwater management will be required.

LOT AREA SCHEDULE

Lot No.:	Area:	Bldg Coverage:	Lot Width:	Lot No.:	Area:	Bldg Coverage:	Lot Width:
01	21792.88	9.4 %	180.3	21	15022.70	13.7 %	173.1
02	13500.00	15.2 %	100.0	22	10000.00	20.5 %	80.0
03	13500.00	15.2 %	100.0	23	10000.00	20.5 %	80.0
04	13500.00	15.2 %	100.0	24	10000.00	20.5 %	80.0
05	13500.00	15.2 %	100.0	25	10000.00	20.5 %	80.0
06	13500.00	15.2 %	100.0	26	10000.00	20.5 %	80.0
07	13500.00	15.2 %	100.0	27	10000.00	20.5 %	80.0
08	13958.99	14.7 %	95.0	28	10000.00	20.5 %	80.0
09	22067.59	9.3 %	95.0	29	10000.00	20.5 %	80.0
10	27615.51	7.4 %	148.6	30	11780.86	17.4 %	146.2
11	12050.68	17.0 %	80.0	31	13742.71	14.9 %	100.0
12	10000.00	20.5 %	80.0	32	13744.85	14.9 %	100.0
13	10000.00	20.5 %	80.0	33	13746.98	14.9 %	100.0
14	10000.00	20.5 %	80.0	34	13749.12	14.9 %	100.0
15	10000.00	20.5 %	80.0	35	13751.25	14.9 %	100.0
16	10000.00	20.5 %	80.0	36	18099.75	11.4 %	100.0
17	10000.00	20.5 %	80.0	37	40305.46	5.1 %	100.0
18	10000.00	20.5 %	80.0	38	29255.31	7.0 %	95.0
19	10000.00	20.5 %	80.0	39	15872.29	12.9 %	95.0
20	14074.44	14.6 %	134.4	40	16877.30	12.2 %	112.2

NOTES:
[1] All Lots design with the same Impervious Coverage Area: BLDG = 2,025 S.F., TOTAL = 3,500 S.F.
[2] The Total Impervious Area noted for each Lot was used for the Project Stormwater Design.

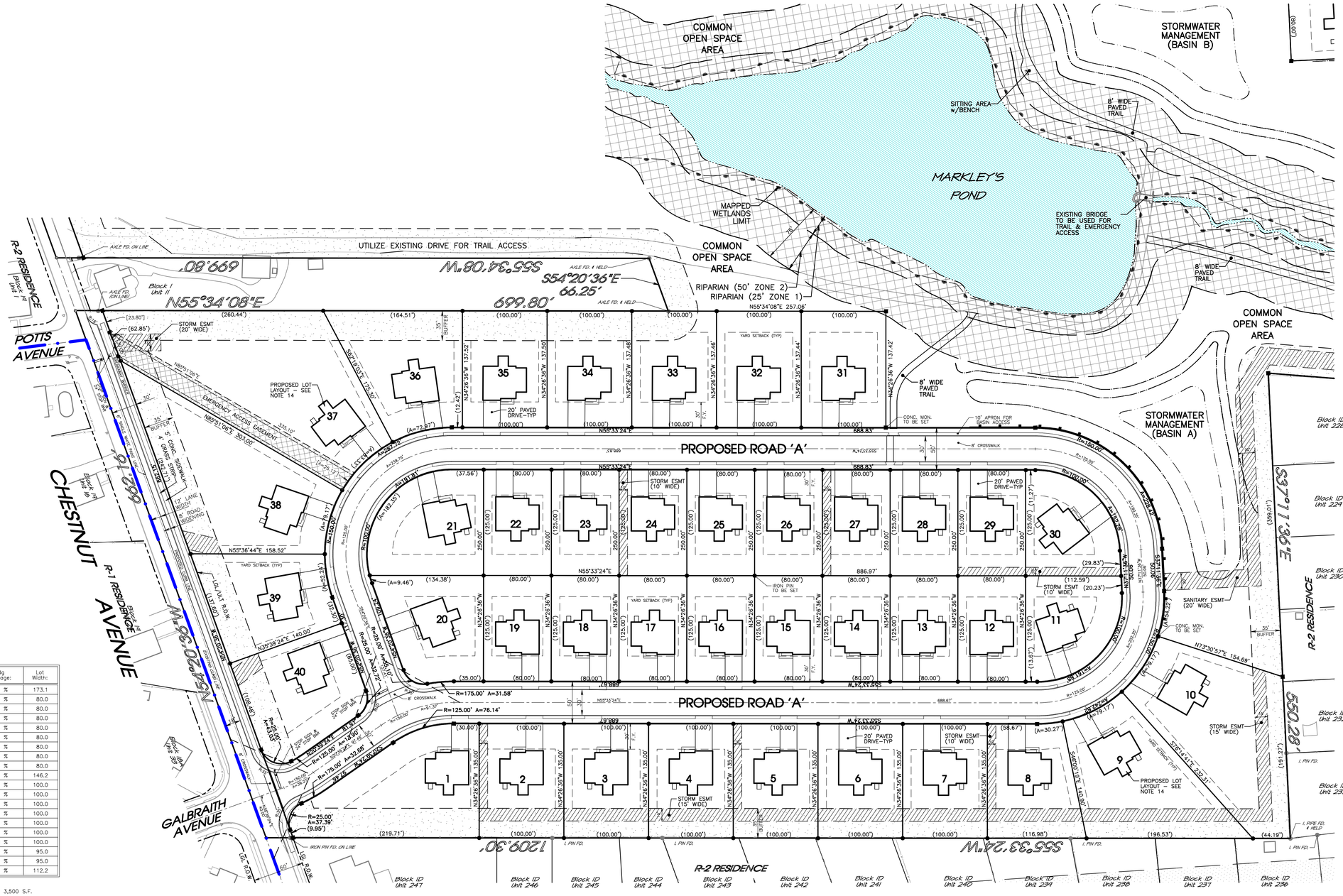

REVISIONS

No.:	DATE:	DESCRIPTION:

COMMONWEALTH OF PENNSYLVANIA
REGISTERED PROFESSIONAL
TIMOTHY P. WOODROW
ENGINEER
No. 036735-E

SCALE IN FEET (1" = 60'-0")

DO NOT SCALE DRAWINGS. ALL DIMENSIONS TO BE VERIFIED IN FIELD. ONLY PLANS 'IC'PERFORMING A RESEL PROFESSIONAL SEAL ARE CONSIDERED TO BE CONSTRUCTION PLANS. ALL OTHER PLANS ARE NOT.
THIS PLAN HAS BEEN PREPARED SPECIFICALLY FOR THE APPLICANT NAMED HEREIN AND IS THE PROPERTY OF WOODROW & ASSOCIATES, INC. AND MAY NOT BE USED OR REPRODUCED BY OTHERS WITHOUT WRITTEN CONSENT OF WOODROW & ASSOCIATES, INC. IS PROTECTED BY LAW.
© COPYRIGHT 2015 WOODROW & ASSOCIATES, INC. - ALL RIGHTS RESERVED

PLAN NORTH

Parcel Information:
TP 63-00-01109-008
Block 1 Unit 7
Deed Bk: 5658
Pg: 2573
Gross Tract: 55.5618 Acres

Record Owner:
DORIS Y & RONALD W MARKLEY REVOCABLE TRUST
1100 Mill Road
Norristown, PA 19403

Applicant:
MikeLen, LLC
Attn: Len Dedrigoo
2900 Eagleville Road
Norristown, PA 19403

PRELIMINARY PLAN (Not To Be Recorded)

LAYOUT PLAN
DEVELOPMENT AREA A
MARKLEY FARM PROPERTY

WEST NORRITON TOWNSHIP - MONTGOMERY COUNTY - PENNSYLVANIA

WOODROW & ASSOCIATES, INC.
MUNICIPAL/CIVIL ENGINEERS
1100 North Bethlehem Pike, Suite 1-C, Lansdale, PA 19002
Phone: (215) 542-5679 Fax: (215) 542-5648
Web: www.woodrowinc.com

Layer List: Sht03_Layout-A
Plan Date: NOV 06, 2015
Job No: 11-0410 D
Design Mgr: J.H.K.
Proj. Mgr: T.P.W.
Sheet No: 3 of 34

Project No: 11-0410 D Project Name: MARKLEY FARM PROPERTY Print Date: Nov 2, 2015 (15:03)

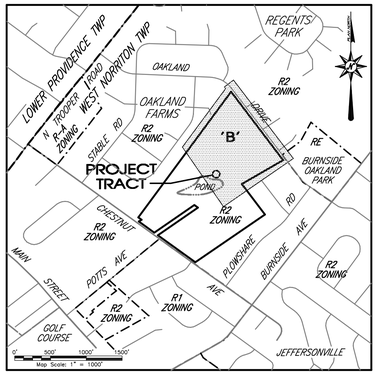

LOCATION MAP

PLAN FEATURES LEGEND

- Tract Boundary Line
- Legal Right-of-Way Line
- Existing Roadway Centerline
- Existing Drive / Paving Limit
- Mapped Wetlands Limits
- Zoning District Boundary

GENERAL NOTES

Base Existing Features and Survey Notes:

Refer to Sheet 6 for all base existing features and survey notes.

Development Notes:

1. The contractor shall ensure that all necessary permits and approvals have been obtained prior to commencement of any site construction activities.
2. Any/all storm water conveyance system(s) and detention facilities shown on these plans are a basic and perpetual part of the storm water management system for this Township, and as such, are to be protected, maintained and preserved in accordance with the approved final plans. The Township and/or its agents may reserve the right and privilege to enter upon such lands from time to time for the purpose of inspection of said storm water management system in order to determine that the structural design and integrity are being maintained.
3. All contractors working on this project shall comply with the requirements of PA Act 287 of 1974 as amended by Act 187 of December 19, 1996. The PA One Call number(s) noted on these plans has/have been obtained by Graf Engineering, LLC. for design purposes only. All contractors working on this site shall obtain a PA One Call serial number for construction purposes not less than three (3) nor more than ten (10) working days prior to construction.
4. Construction materials and procedures shall follow Pennsylvania Department of Transportation Specifications and Standard Drawings (latest edition).
5. Nothing shall be permitted to be set on, placed or planted within, the area of any utility or storm water easement except lawns or suitable low ground cover.
6. The proposed finished grading shown on this plan has been based on the proposed building(s) finished floor elevations and has been used to design the storm water management facilities. The contractor shall comply with the grading scheme indicated unless otherwise approved by the Township and Design Engineers.
7. Erosion and sedimentation control measures shall be in place and functional prior to any earth disturbance or grading work.
8. A minimum of six (6) inches of clean topsoil shall be provided on all lawn and planting areas.
9. Site grading shall be performed in accordance with these plans. The contractor shall be responsible for removing and replacing all soft, yielding or unsuitable materials and replacing with suitable materials. All excavated or filled areas shall be compacted to 95% of modified proctor maximum density per A.S.T.M. Test D–1557. moisture content at time of placement shall be no more than 2% above nor 3% below optimum. contractor shall submit a compaction report prepared by a qualified soils engineer, registered within the state where the work is performed, verifying that all filled areas and subgrade areas within the building pad area and areas to be paved have been compacted in accordance with these plans.
10. Subbase material for sidewalks, curb, or asphalt shall be free of organics and other unsuitable materials. Should subbase be deemed unsuitable, subbase is to be removed and filled with approved fill material compacted to 95% optimum density (as determined by modified proctor method).
11. The minimum slope in grassed areas shall not be less than 2% and the minimum in paved areas shall not be less than 1
12. Erosion control matting shall be provided on all earth slopes at 3:1 or greater.
13. Contractor to ensure compliance with ADA regulations.
14. Lot layout, including Dwelling footprint and driveway configuration, is illustrated to show design compliance. Final Dwelling footprint and Lot configuration to be determined on an individual Lot basis and a Building/Grading Permit plan will be prepared and submitted for each Lot.
15. The Total Impervious Coverage noted in comment 2 of the Lot Area Schedule has been utilized in the design of the Porject Stormwater Management System. If any Lot proposes an additional increase in Lot impervious at time of Building/Grading Permit, additional On–Lot stormwater management will be required.

LOT AREA SCHEDULE

Lot No.:	Area:	Bldg Coverage:	Lot Width:	Lot No.:	Area:	Bldg Coverage:	Lot Width:
41	16053.65	12.8 %	92.0	61	13937.90	14.7 %	130.2
42	13600.00	15.1 %	85.0	62	10000.00	20.5 %	80.0
43	13600.00	15.1 %	85.0	63	10070.93	20.4 %	80.0
44	13600.00	15.1 %	85.0	64	13728.14	14.9 %	108.5
45	13600.00	15.1 %	85.0	65	12272.20	16.7 %	107.7
46	13600.00	15.1 %	85.0	66	10233.11	20.0 %	80.0
47	13600.00	15.1 %	85.0	67	12805.98	16.0 %	95.9
48	17697.20	11.6 %	104.5	68	13866.55	14.8 %	80.0
49	14194.66	14.5 %	125.0	69	15583.23	13.2 %	80.0
50	10625.00	19.3 %	85.0	70	15898.93	12.9 %	80.0
51	10625.00	19.3 %	85.0	71	12800.00	16.0 %	80.0
52	10625.00	19.3 %	85.0	72	12800.00	16.0 %	80.0
53	10625.00	19.3 %	85.0	73	12800.00	16.0 %	80.0
54	10625.00	19.3 %	85.0	74	12800.00	16.0 %	80.0
55	13923.50	14.7 %	125.0	75	16000.00	12.8 %	100.0
56	13120.69	15.6 %	157.3	76	12800.00	16.0 %	80.0
57	10625.00	19.3 %	85.0	77	12800.00	16.0 %	80.0
58	10625.00	19.3 %	85.0	78	12800.00	16.0 %	80.0
59	10625.00	19.3 %	85.0	79	25887.21	7.9 %	134.7
60	10625.00	19.3 %	85.0				

NOTES:

[1] All Lots design with the same Impervious Coverage Area: BLDG = 2,025 S.F., TOTAL = 3,500 S.F.
[2] The Total Impervious Area noted for each Lot was used for the Project Stormwater Design.

REVISIONS

No.:	DATE:	DESCRIPTION:

COMMONWEALTH OF PENNSYLVANIA
REGISTERED PROFESSIONAL
TIMOTHY P. WOODROW
ENGINEER
No. 036735-E

SCALE IN FEET (1" = 60'-0")

DISCLAIMER "CONFORMING & NRELD PROFESSIONAL SEALS" ONLY APPLIES TO THE PLAN SET WHICH BEARS ORIGINAL SEALS.

THIS PLAN HAS BEEN PREPARED SPECIFICALLY FOR THE APPLICANT NAMED HEREIN AND IS THE PROPERTY OF WOODROW & ASSOCIATES, INC. IT MAY NOT BE REPRODUCED OR USED WITHOUT WRITTEN CONSENT OF WOODROW & ASSOCIATES, INC. IS PROTECTED BY LAW.

© COPYRIGHT 2015 WOODROW & ASSOCIATES, INC. – ALL RIGHTS RESERVED

PLAN NORTH

Parcel Information:
TP 63–00–01109–008
Block – Unit: 7
Deed Bk: 5658
Pg: 2573

Gross Tract:
55.5618 Acres

Record Owner:
DORIS Y & RONALD W MARKLEY REVOCABLE TRUST
2250 Cassel Road
Norristown, PA 19403

Applicant:
MikeLen, LLC
Attn: Len Deforgiorgio
2955 Ft. Lewis Blvd. Suite
Norristown, PA 19403

PRELIMINARY PLAN (Not To Be Recorded)

LAYOUT PLAN – DEVELOPMENT AREA B
MARKLEY FARM PROPERTY

WEST NORRITON TOWNSHIP – MONTGOMERY COUNTY – PENNSYLVANIA

WOODROW & ASSOCIATES, INC.
MUNICIPAL CIVIL CONSULTING ENGINEERS
1108 North Bethlehem Pike, Suite 1-A, Lansdale, PA 19002
Phone: (215) 542–8646 Fax: (215) 542–5679
Web: www.woodrowinc.com

Layer List: Sht04_Layout–B
Plan Date: NOV 06, 2015
Job No: 11–0410 D
Design Mgr: J.H.K.
Proj. Mgr: T.P.W.
Sheet No: 4 of 34

Project No: 11–0410 D Project Name: MARKLEY FARM PROPERTY Print Date: Nov 2, 2015 (15:03)

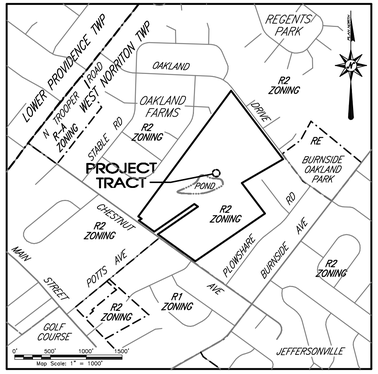

LOCATION MAP

PLAN FEATURES LEGEND

- Tract Boundary Line
- Legal Right-of-Way Line
- Existing Roadway Centerline
- Mapped Wetlands Limits
- Supplemental Contour (2' Interval)
- Index Contour (10' Interval)
- Existing Soil Series Limits
- Existing Drive / Paving Limit
- Existing Vegetation Limit
- Existing Storm Sewer Piping
- Existing Sanitary Sewer Piping
- Existing Gas Main
- Existing Water Main / Service
- Existing Fence Line

GENERAL NOTES

Base Existing Features and Survey Notes

1. The project site is identified as:
   Record Owner: DORIS Y & RONALD W MARKLEY REVOCABLE TRUST
   Site Address: 2325 Chestnut Avenue, Norristown, PA 19403-3036
   Block / Unit: 001 007
   Tax Parcel No.: 63-00-01108-008
   Deed Bk / Page: 5658 / 2573
   Gross Area: 55.5618 Acres

2. A Metes and Bounds survey was performed by Woodrow & Associates, Inc. The survey was performed without benefit of a Title Report and was prepared from documents of record. This property may be subject to additional rights of others that might be listed in a Title Report. This survey was prepared during the month of May, 2015.

3. Topography illustrated upon this plan taken from a field survey performed by Woodrow & Associates, Inc., during the month of May 2015. It is supplimented with data obtained from the Pennsylvania Spatial Data Access online mapping site, which was aquired in connection with the PAMAP Lidar Program and was collected in 2008. The Elevation Datum is NGVD 1988.

4. This plan was prepared utilizing the following references:
   a. Tax maps and deeds of record as obtained from the Montgomery County Recorder of Deeds and Tax Assessors Offices, Norristown, PA.
   b. Existing Soils classifications and mapping has been plotted data obtained from the USDA-NRCS Web Soil Survey (WSS) web site.
   c. Site Flood Plain information has been obtained from the FEMA Map Service Center web site (http://msc.fema.gov). Community Panel 420711-0244 E (Dec 19, 1996)
   d. Wetlands illustrated were field mapped by John Szczepanski, PhD, Nova Consultants (Jan. 2013). Wetlands flagging field located by Woodrow & Assoc., Inc.
   e. Ultimate right-of-way information illustrated taken from West Norriton Township Subdivision Ordinance section 503.1.C(1)(b)(2)
   f. West Norriton Township Zoning Map dated November 12th, 2001.
   g. Aerial images provided by Google Earth and Delaware Valley Regional Planning Commission.

5. All contractors working on this project shall comply with the requirements of PA Act 287 of 1974 as amended by PA Act 181 of 2006 (Pennsylvania One Call system). All contractors working on this site shall obtain a PA One Call serial number for construction purposes not less than three (3) nor more than ten (10) working days prior to construction.
   Serial No.: 20151130184 West Norriton Twp-Oakland Drive (For Design) 04/23/2015
   Serial No.: 20151130167 West Norriton Twp-Chestnut (For Design) 04/23/2015

6. Existing subsurface utility information illustrated on these plans are based upon visual field inspection. Information pertaining to the size, location, depth, etc. of subsurface utilities is approximate in nature and has been obtained as an aid for the project design. There is no expressed or implied agreement that utility size, location, depth, etc. as shown, exists between explored locations. Accordingly, utility information shown should not be relied upon for construction purposes. It is incumbent upon the contractor to verify subsurface utilities prior to excavation.

Site Demolition Note:

7. Existing features within the denoted area are to be demolished and/or removed as part of this project. Applicant and/or it's agents will secure any and all necessary permits prior to any demolition activities. Items to be demolished are (but not limited to); Exisitng Buildings, paving sections, abandoned or unused utilities, vegetation, concrete, etc.

   All demolition will be disposed of in accodance with the PA DEP's Solid Waste Management Regulations (at 25 Pa Code 260.1 et seq., 271.1 et seq.) and per any local regulations governing disposal of demolition waste materials.

   The Contractor shall not illegally bury, dump, or discharge any building material or wastes at this site.

PROJECT SOILS DATA

Soils Type	Slopes	Depth to Restrictive Feature:	Depth to Water Table:	Hydrologic Soil Group:
AbA Abbottstown silt loam	3 to 8 percent	15-30" to Fragipan 40-60" to Lithic Bedrock	6 to 18"	C
Bo Bowmansville-Knauers silt loams	N / A	72-99" to Lithic Bedrock	0 to 18"	D
CfA Chalfont silt loam	0 to 3 percent	15-30" to Fragipan 42-99" to Lithic Bedrock	6 to 18"	C
CfB Chalfont silt loam	3 to 8 percent	15-30" to Fragipan 42-99" to Lithic Bedrock	6 to 18"	C
LaB Lansdale silt loam	3 to 8 percent	42-60" to Lithic Bedrock	80"+	B
LeA Lawrenceville silt loam	0 to 3 percent	24-38" to Fragipan 48-99" to Lithic Bedrock	18 to 36"	C
LeB Lawrenceville silt loam	3 to 8 percent	24-38" to Fragipan 48-99" to Lithic Bedrock	18 to 36"	C
PeC Penn silt loam	8 to 15 percent	20-40" to Lithic Bedrock	80"+	C
PlB Penn-Lansdale complex	3 to 8 percent	20-40" to Lithic Bedrock	80"+	C
PlC Penn-Lansdale complex	8 to 15 percent	20-40" to Lithic Bedrock	80"+	C
ReB Readington silt loam	3 to 8 percent	20-36" to Fragipan 40-70" to Lithic Bedrock	18 to 36"	C
UroB Urban land-Lawrenceville complex	0 to 8 percent	24-38" to Fragipan 48-99" to Lithic Bedrock	18 to 36"	C
UrxB Urban land-Penn complex	0 to 8 percent	10-100" to Lithic Bedrock	80"+	C

REVISIONS

No.:	DATE:	DESCRIPTION:

COMMONWEALTH OF PENNSYLVANIA REGISTERED PROFESSIONAL KEVIN R. GIBBONS LAND SURVEYOR No. 044550-E

SCALE IN FEET (1" = 150'-0")

© COPYRIGHT 2015 WOODROW & ASSOCIATES, INC. - ALL RIGHTS RESERVED

PLAN NORTH

Parcel Information: TP 63-00-01108-008 Block - 1 Unit - 7 Deed Bk: 5658 Pg: 2573 Gross Tract: 55.5618 Acres

Record Owner: DORIS Y & RONALD W MARKLEY REVOCABLE TRUST 2325 Chestnut Avenue Norristown, PA 19403

Applicant: MikeLen, LLC Attn: Len Delchiaro 2325 Chestnut Avenue Norristown, PA 19403

PRELIMINARY PLAN (Not To Be Recorded)

NEIGHBORHOOD PLAN (400 Ft. Radius)

MARKLEY FARM PROPERTY

WEST NORRITON TOWNSHIP - MONTGOMERY COUNTY - PENNSYLVANIA

WOODROW & ASSOCIATES, INC.
MUNICIPAL CIVIL CONSULTING ENGINEERS
1109 North Bethlehem Pike, Suite 3 Lansdale, PA 19002
Phone: (215) 542-5646 Fax: (215) 542-5679
Web: www.woodrowinc.com

Layer List: Sht05_400Ft
Plan Date: NOV 06, 2015
Job No: 11-0410 D
Design Mgr: J.H.K.
Proj. Mgr: T.P.W.
Sheet No: 5 of 34

Project No: 11-0410 D Project Name: MARKLEY FARM PROPERTY Print Date: Nov 2, 2015 (15:03)

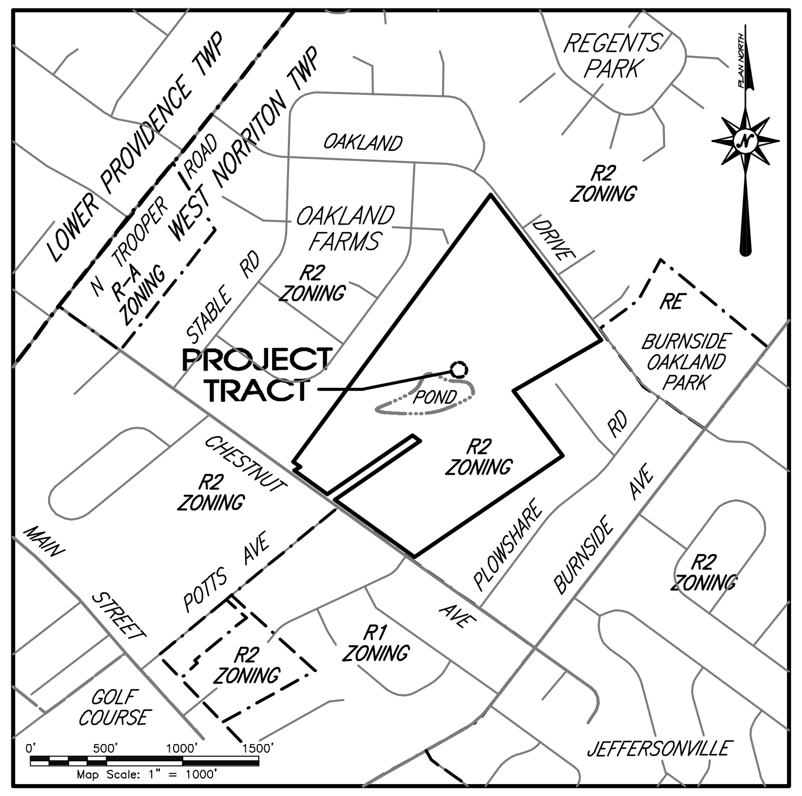

LOCATION MAP

PLAN FEATURES LEGEND

- Tract Boundary Line
- Legal Right-of-Way Line
- Existing Roadway Centerline
- Mapped Wetlands Limits
- Supplemental Contour (2' Interval)
- Index Contour (10' Interval)
- Existing Soil Series Limits
- Existing Drive / Paving Limit
- Existing Vegetation Limit
- Existing Storm Sewer Piping
- Existing Sanitary Sewer Piping
- Existing Gas Main
- Existing Water Main / Service
- Existing Overhead Utility Wires
- Existing Underground Telephone
- Existing Fence Line
- (T.B.R.) Existing Feature TO BE REMOVED

EXISTING SITE IMPERVIOUS

Based on NET Tract Area of: 2,392,240.50 SQ FT (54.9183 Acres)

BUILDINGS and STRUCTURES:	21,300 Sq. Ft.	/ 0.89 %
CONCRETE (WALKS/PADS/HARDSCAPE):	27,250 Sq. Ft.	
ASPHALT PAVING:	40,107 Sq. Ft.	
SITE TOTAL:	88,657 Sq. Ft.	/ 3.71 %

GENERAL NOTES

Base Existing Features and Survey Notes

1. The project site is identified as:
   - Record Owner: DORIS Y & RONALD W MARKLEY REVOCABLE TRUST
   - Site Address: 2325 Chestnut Avenue, Norristown, PA 19403–3036
   - Block / Unit: 001 / 007
   - Tax Parcel No.: 63–00–01108–008
   - Deed Bk / Page: 5658 / 2573
   - Gross Area: 55.5618 Acres

2. A Metes and Bounds survey was performed by Woodrow & Associates, Inc. The survey was performed without benefit of a Title Report and was prepared from documents of record. This property may be subject to additional rights of others that might be listed in a Title Report. This survey was prepared during the month of May, 2015.

3. Topography illustrated upon this plan taken from a field survey performed by Woodrow & Associates, Inc., during the month of May 2015. It is supplimented with data obtained from the Pennsylvania Spatial Data Access online mapping site, which was aquired in connection with the PAMAP Lidar Program and was collected in 2008. The Elevation Datum is NGVD 1988.

4. This plan was prepared utilizing the following references:
   a. Tax maps and deeds of record as obtained from the Montgomery County Recorder of Deeds and Tax Assessors Offices, Norristown, PA.
   b. Existing Soils classifications and mapping has been plotted data obtained from the USDA–NRCS Web Soil Survey (WSS) web site.
   c. Site Flood Plain information has been obtained from the FEMA Map Service Center web site (http://msc.fema.gov). Community Panel 420711–0244 E (Dec 19, 1996)
   d. Wetlands illustrated were field mapped by John Szczepanski, PhD, Nova Consultants (Jan. 2013). Wetlands flagging field located by Woodrow & Assoc., Inc.
   e. Ultimate right–of–way information illustrated taken from West Norriton Township Subdivision Ordinance section 503.1.C(1)(b)(2)
   f. West Norriton Township Zoning Map dated November 12th, 2001.
   g. Aerial images provided by Google Earth and Delaware Valley Regional Planning Commission.

5. All contractors working on this project shall comply with the requirements of PA Act 287 of 1974 as amended by PA Act 181 of 2006 (Pennsylvania One Call system). All contractors working on this site shall obtain a PA One Call serial number for construction purposes not less than three (3) nor more than ten (10) working days prior to construction.
   Serial No.: 20151130184 West Norriton Twp–Oakland Drive (For Design) 04/23/2015
   Serial No.: 20151130167 West Norriton Twp–Chestnut (For Design) 04/23/2015

6. Existing subsurface utility information illustrated on these plans are based upon visual field inspection. Information pertaining to the size, location, depth, etc. of subsurface utilities is approximate in nature and has been obtained as an aid for the project design. There is no expressed or implied agreement that utility size, location, depth, etc. as shown, exists between explored locations. Accordingly, utility information shown should not be relied upon for construction purposes. It is incumbent upon the contractor to verify subsurface utilities prior to excavation.

Site Demolition Note:

7. Existing features within the denoted area are to be demolished and/or removed as part of this project. Applicant and/or it's agents will secure any and all necessary permits prior to any demolition activities. Items to be demolished are (but not limited to); Exisitng Buildings, paving sections, abandoned or unused utilities, vegetation, concrete, etc.

   All demolition will be disposed of in accodance with the PA DEP's Solid Waste Management Regulations (at 25 Pa Code 260.1 et seq., 271.1 et seq.) and per any local regulations governing disposal of demolition waste materials.

   The Contractor shall not illegally bury, dump, or discharge any building material or wastes at this site.

PROJECT SOILS DATA

Soils Type	Slopes	Depth to Restrictive Feature:	Depth to Water Table:	Hydrologic Soil Group:
AbA Abbottstown silt loam	3 to 8 percent	15–30" to Fragipan 40–60" to Lithic Bedrock	6 to 18"	C
Bo Bowmansville–Knauers silt loams	N / A	72–99" to Lithic Bedrock	0 to 18"	D
CfA Chalfont silt loam	0 to 3 percent	15–30" to Fragipan 42–99" to Lithic Bedrock	6 to 18"	C
CfB Chalfont silt loam	3 to 8 percent	15–30" to Fragipan 42–99" to Lithic Bedrock	6 to 18"	C
LaB Lansdale silt loam	3 to 8 percent	42–60" to Lithic Bedrock	80"+	B
LeA Lawrenceville silt loam	0 to 3 percent	24–38" to Fragipan 48–99" to Lithic Bedrock	18 to 36"	C
LeB Lawrenceville silt loam	3 to 8 percent	24–38" to Fragipan 48–99" to Lithic Bedrock	18 to 36"	C
PeC Penn silt loam	8 to 15 percent	20–40" to Lithic Bedrock	80"+	C
PlB Penn–Lansdale complex	3 to 8 percent	20–40" to Lithic Bedrock	80"+	C
PlC Penn–Lansdale complex	8 to 15 percent	20–40" to Lithic Bedrock	80"+	C
ReB Readington silt loam	3 to 8 percent	20–36" to Fragipan 40–70" to Lithic Bedrock	18 to 36"	C
UroB Urban land–Lawrenceville complex	0 to 8 percent	24–38" to Fragipan 48–99" to Lithic Bedrock	18 to 36"	C
UrxB Urban land–Penn complex	0 to 8 percent	10–100" to Lithic Bedrock	80"+	C

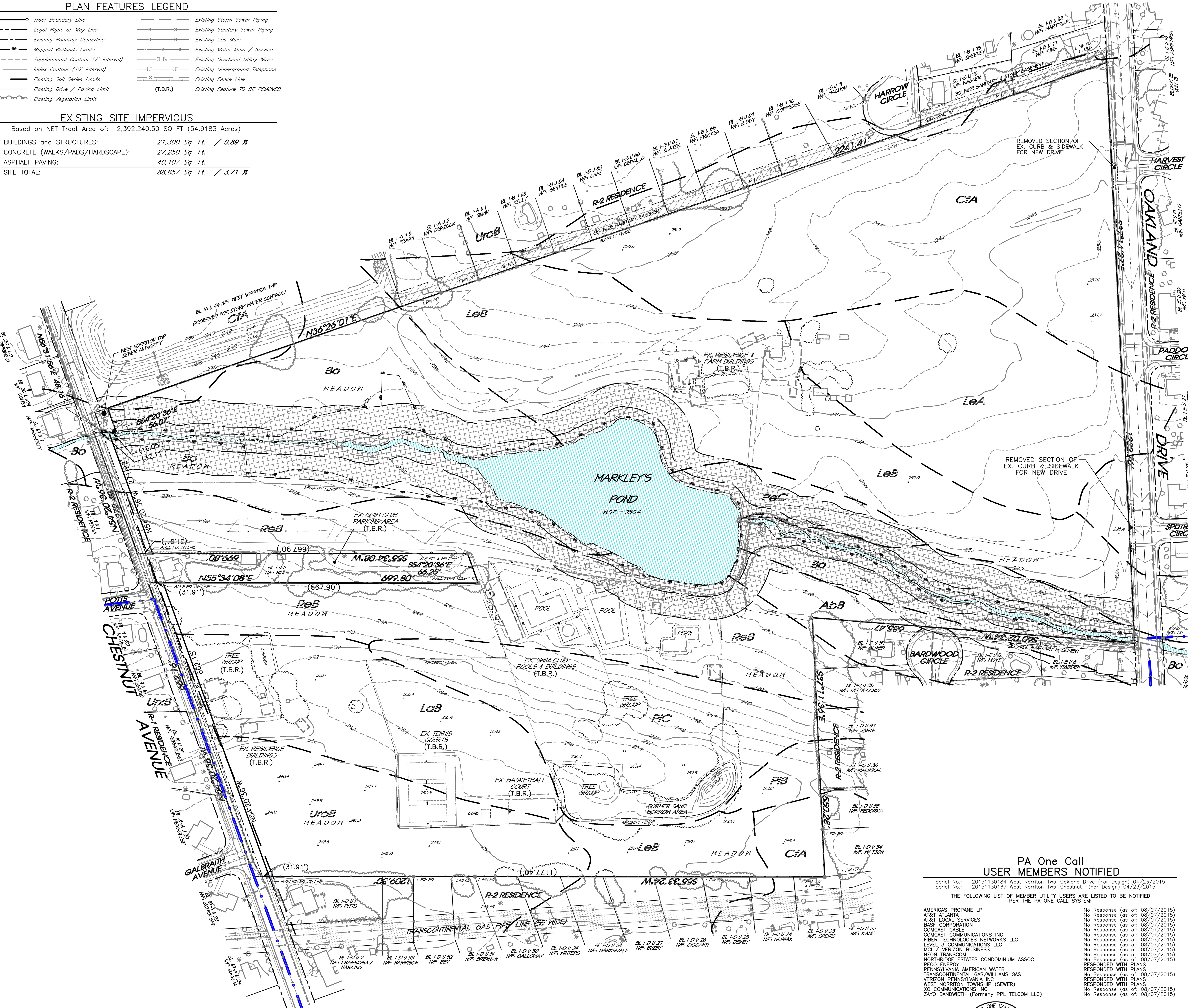

PA One Call USER MEMBERS NOTIFIED

Serial No.: 20151130184 West Norriton Twp–Oakland Drive (For Design) 04/23/2015
Serial No.: 20151130167 West Norriton Twp–Chestnut (For Design) 04/23/2015

THE FOLLOWING LIST OF MEMBER UTILITY USERS ARE LISTED TO BE NOTIFIED PER THE PA ONE CALL SYSTEM:

AMERIGAS PROPANE LP	No Response (as of: 08/07/2015)
AT&T ATLANTA	No Response (as of: 08/07/2015)
AT&T LOCAL SERVICES	No Response (as of: 08/07/2015)
BASF CORPORATION	No Response (as of: 08/07/2015)
COMCAST CABLE	No Response (as of: 08/07/2015)
COMCAST COMMUNICATIONS INC.	No Response (as of: 08/07/2015)
FIBER TECHNOLOGIES NETWORKS LLC	No Response (as of: 08/07/2015)
LEVEL 3 COMMUNICATIONS LLC	No Response (as of: 08/07/2015)
MCI / VERIZON BUSINESS	No Response (as of: 08/07/2015)
NEON TRANSCOM	No Response (as of: 08/07/2015)
NORTHRIDGE ESTATES CONDOMINIUM ASSOC	No Response (as of: 08/07/2015)
PECO ENERGY	RESPONDED WITH PLANS
PENNSYLVANIA AMERICAN WATER	RESPONDED WITH PLANS
TRANSCONTINENTAL GAS/WILLIAMS GAS	No Response (as of: 08/07/2015)
VERIZON PENNSYLVANIA INC	RESPONDED WITH PLANS
WEST NORRITON TOWNSHIP (SEWER)	RESPONDED WITH PLANS
XO COMMUNICATIONS INC	No Response (as of: 08/07/2015)
ZAYO BANDWIDTH (Formerly PPL TELCOM LLC)	No Response (as of: 08/07/2015)

PENNSYLVANIA ONE CALL SYSTEM, INC. 1-800-242-1776 STOP-CALL BEFORE YOU DIG!

BEFORE YOU DIG ANYWHERE IN PENNSYLVANIA!
CALL 1–800–242–1776 or 811

PA LAW REQUIRES THREE WORKING DAYS NOTICE TO UTILITIES BEFORE YOU EXCAVATE, DRILL, BLAST OR DEMOLISH

REVISIONS

No.:	DATE:	DESCRIPTION:

COMMONWEALTH OF PENNSYLVANIA REGISTERED PROFESSIONAL LAND SURVEYOR KEVIN R. GIBBONS No. 044550–E

SCALE IN FEET (1" = 100'–0")

ONLY PLANS INCORPORATING A RAISED PROFESSIONAL SEAL ARE CONSIDERED TO BE OFFICIAL AND RELIED UPON BY THE USER.

THIS PLAN HAS BEEN PREPARED SPECIFICALLY FOR THE APPLICANT AND PROJECT DESIGNATED HEREON. ANY MODIFICATION, REVISION, DUPLICATION OR USE WITHOUT WRITTEN CONSENT OF WOODROW & ASSOCIATES, INC. IS PROHIBITED BY LAW.

© COPYRIGHT 2015 WOODROW & ASSOCIATES, INC. – ALL RIGHTS RESERVED

PLAN NORTH

Parcel Information:
TP 63–00–01108–008
Block 1 Unit 7
Deed Bk: 5658
Pg: 2573
Gross Tract: 55.5618 Acres

Record Owner:
DORIS Y &
RONALD W MARKLEY
REVOCABLE TRUST
2325 Chestnut Avenue
Norristown, PA 19403

Applicant:
MikeLen, LLC
Attn: Len DelGrippo
2965 W. Germantown Pike
Norristown, PA 19403

PRELIMINARY PLAN (Not To Be Recorded)

EXISTING FEATURES & DEMOLITION PLAN

MARKLEY FARM PROPERTY

WEST NORRITON TOWNSHIP – MONTGOMERY COUNTY – PENNSYLVANIA

WOODROW & ASSOCIATES, INC.
MUNICIPAL / CIVIL CONSULTING ENGINEERS
1108 North Bethlehem Pike / Suite 5 – Lower Gwynedd – PA 19002
Phone: (215) 542–5648 Fax: (215) 542–5679
Web: www.WoodrowInc.com

Layer List:	Sht06_ExFea
Plan Date:	NOV 06, 2015
Job No:	11–0410 D
Design Mgr: J.H.K.	Sheet No: 6 of 34
Proj. Mgr: T.P.W.	

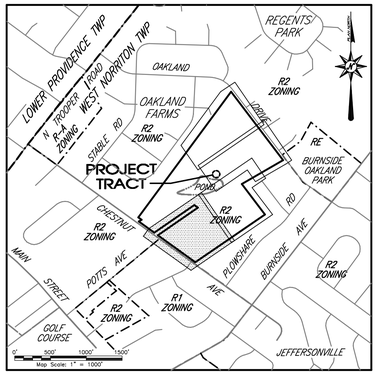

LOCATION MAP

GENERAL NOTES

Base Existing Features and Survey Notes:

Refer to Sheet 6 for all base existing features and survey notes.

Development Notes:

1. The contractor shall ensure that all necessary permits and approvals have been obtained prior to commencement of any site construction activities.
2. Any/all storm water conveyance system(s) and detention facilities shown on these plans are a basic and perpetual part of the storm water management system for this Township, and as such, are to be protected, maintained and preserved in accordance with the approved final plans. The Township and/or its agents may reserve the right and privilege to enter upon such lands from time to time for the purpose of inspection of said storm water management system in order to determine that the structural design and integrity are being maintained.
3. All contractors working on this project shall comply with the requirements of PA Act 287 of 1974 as amended by Act 187 of December 19, 1996. The PA One Call number(s) noted on these plans has/have been obtained by Graf Engineering, LLC. for design purposes only. All contractors working on this site shall obtain a PA One Call serial number for construction purposes not less than three (3) nor more than ten (10) working days prior to construction.
4. Construction materials and procedures shall follow Pennsylvania Department of Transportation Specifications and Standard Drawings (latest edition).
5. Nothing shall be permitted to be set on, placed or planted within, the area of any utility or storm water easement except lawns or suitable low ground cover.
6. The proposed finished grading shown on this plan has been based on the proposed building(s) finished floor elevations and has been used to design the storm water management facilities. The contractor shall comply with the grading scheme indicated unless otherwise approved by the Township and Design Engineers.
7. Erosion and sedimentation control measures shall be in place and functional prior to any earth disturbance or grading work.
8. A minimum of six (6) inches of clean topsoil shall be provided on all lawn and planting areas.
9. Site grading shall be performed in accordance with these plans. The contractor shall be responsible for removing and replacing all soft, yielding or unsuitable materials and replacing with suitable materials. All excavated or filled areas shall be compacted to 95% of modified proctor maximum density per A.S.T.M. Test D-1557. moisture content at time of placement shall be no more than 2% above nor 3% below optimum. contractor shall submit a compaction report prepared by a qualified soils engineer, registered within the state where the work is performed, verifying that all filled areas and subgrade areas within the building pad area and areas to be paved have been compacted in accordance with these plans.
10. Subbase material for sidewalks, curb, or asphalt shall be free of organics and other unsuitable materials. Should subbase be deemed unsuitable, subbase is to be removed and filled with approved fill material compacted to 95% optimum density (as determined by modified proctor method).
11. The minimum slope in grassed areas shall not be less than 2% and the minimum in paved areas shall not be less than 1
12. Erosion control matting shall be provided on all earth slopes at 3:1 or greater.
13. Contractor to ensure compliance with ADA regulations.

Utility Notes:

14. Refer to architectural drawings for exact building utility connection locations. Service sizes to be determined by Architect.
15. Contractor to confirm the horizontal location and vertical elevation of utilities being crossed or connected into prior to construction. The engineer of record shall be informed in writing of any discrepancies or clearance issues prior to proceeding with construction.
16. Clean outs and curb boxes within the paved areas must have traffic loading frames and covers.
17. Shop drawings and/or literature submittal on equipment/products associated with the sanitary sewer and potable water facilities will be provided to the operator of said facilities for approval prior to fabrication and/or erection.
18. Location of all existing and proposed services are approximate and must be confirmed independently with local utility companies prior to commencement of any construction or excavation. Sanitary sewer and all other utility service connection points shall be confirmed independently by the contractor in field prior to the commencement of construction. All discrepancies shall be reported immediately in writing to the engineer of record. Construction shall commence beginning at the lowest invert (point of connection) and progress up gradient. Interface points (crossings) with existing underground installations shall be field verified by test pit prior to commencement of construction.

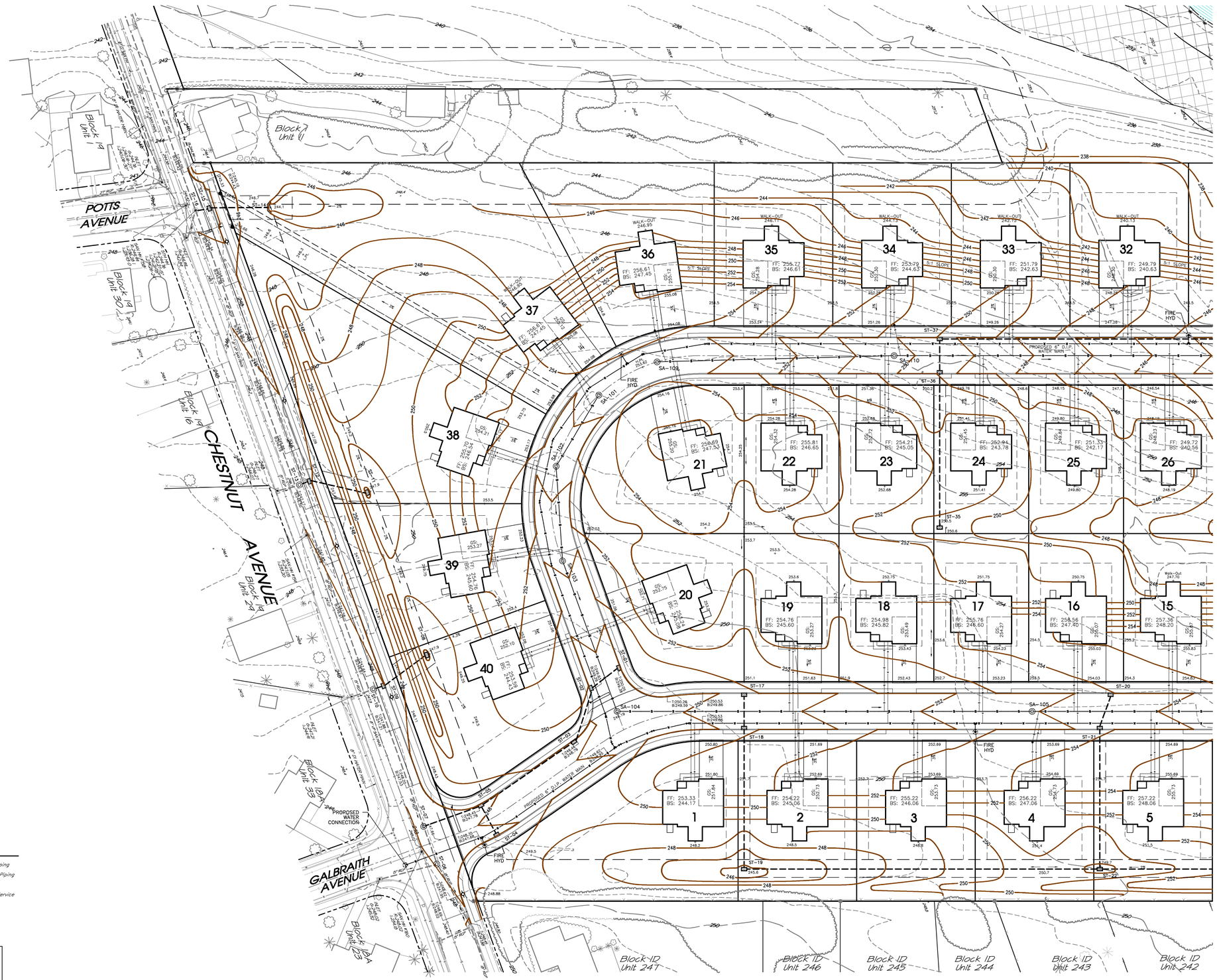

PLAN FEATURES LEGEND

- Tract Boundary Line
- Legal Right-of-Way Line
- Existing Roadway Centerline
- Mapped Wetlands Limits
- Supplemental Contour (2' Interval)
- Index Contour (10' Interval)
- Existing Drive / Paving Limit
- Existing Vegetation Limit
- Existing Storm Sewer Piping
- Existing Sanitary Sewer Piping
- Existing Gas Main
- Existing Water Main / Service
- Existing Fence Line

Refer to STRUCTURE SCHEDULES & CONSTRUCTION DETAILS – SHEET 'A' (Sheet 14) for Storm Structure & Pipe Data.

Refer to PLAN and PROFILE SHEETS (Sheets 18 thru 26) for all Sanitary Sewer Structure & Pipe Data.

REVISIONS

No.:	DATE:	DESCRIPTION:

COMMONWEALTH OF PENNSYLVANIA
REGISTERED PROFESSIONAL
TIMOTHY P. WOODROW
ENGINEER
No. 036735-E

SCALE IN FEET (1" = 40'-0")

PLAN NORTH

COPYRIGHT 2015 WOODROW & ASSOCIATES, INC. – ALL RIGHTS RESERVED

Parcel Information: TP 63-00-01106-008 Block – Unit 7 Deed Bk: 5658 Pg: 2573 Gross Tract: 55.5618 Acres

Record Owner: DORIS Y & RONALD W MARKLEY REVOCABLE TRUST 2500 Jacksonville Road Norristown, PA 19403

Applicant: MikeLen, LLC Attn: Len DeGrippo 2500 Jacksonville Road Norristown, PA 19403

PRELIMINARY PLAN (Not To Be Recorded)

GRADING and DRAINAGE PLAN DEVELOPMENT AREA A1

MARKLEY FARM PROPERTY

WEST NORRITON TOWNSHIP – MONTGOMERY COUNTY – PENNSYLVANIA

WOODROW & ASSOCIATES, INC.
MUNICIPAL CIVIL CONSULTING ENGINEERS
1100 North Bethlehem Pike, Suite 2, Lansdale, PA 19446
Phone: (215) 542-5648 Fax: (215) 542-5679
Web: www.Woodrowinc.com

Layer List: Sht07_Grading-A1
Plan Date: NOV 06, 2015
Job No: 11-0410 D
Design Mgr: J.H.K.
Proj. Mgr: T.P.W.
Sheet No: 7 of 34

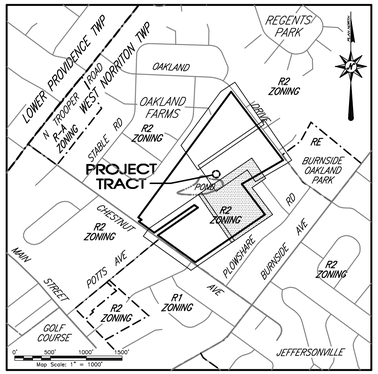

LOCATION MAP

GENERAL NOTES

Base Existing Features and Survey Notes:

Refer to Sheet 6 for all Base Existing Features and Survey Notes.

Development Notes:

Refer to Sheet 7 for all Development and Utility Notes.

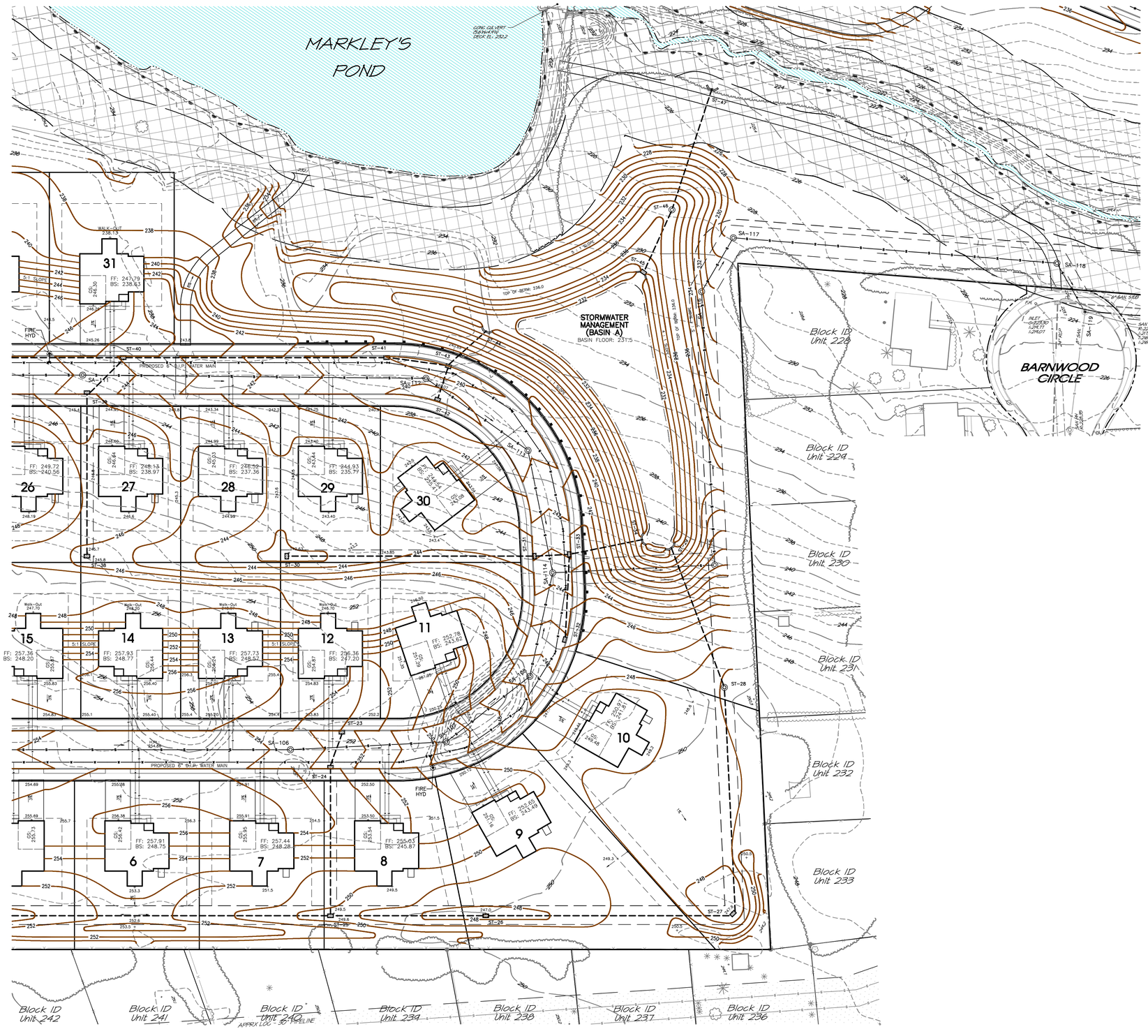

PLAN FEATURES LEGEND

- Tract Boundary Line
- Legal Right-of-Way Line
- Existing Roadway Centerline
- Mapped Wetlands Limits
- Supplemental Contour (2' Interval)
- Index Contour (10' Interval)
- Existing Drive / Paving Limit
- Existing Vegetation Limit
- Existing Storm Sewer Piping
- Existing Sanitary Sewer Piping
- Existing Gas Main
- Existing Water Main / Service
- Existing Fence Line

Refer to STRUCTURE SCHEDULES & CONSTRUCTION DETAILS – SHEET 'A' (Sheet 14) for Storm Structure & Pipe Data.

Refer to PLAN and PROFILE SHEETS (Sheets 18 thru 26) for all Sanitary Sewer Structure & Pipe Data.

Project No: 11-0410 D Project Name: MARKLEY FARM PROPERTY Print Date: Nov 2, 2015 (15:01)

REVISIONS

No.:	DATE:	DESCRIPTION:

COMMONWEALTH OF PENNSYLVANIA
REGISTERED PROFESSIONAL
TIMOTHY P. WOODROW
ENGINEER
No. 038735-E

SCALE IN FEET (1" = 40'-0")

ONLY PLANS INCORPORATING A RAISED PROFESSIONAL SEAL ARE CONSIDERED TO BE OFFICIAL AND RELIED UPON BY THE USER.

THIS PLAN HAS BEEN PREPARED SPECIFICALLY FOR THE APPLICANT AND PROJECT DESIGNATED HEREON. ANY MODIFICATION, REVISION, DUPLICATION OR USE WITHOUT WRITTEN CONSENT OF WOODROW & ASSOCIATES, INC. IS PROHIBITED BY LAW.

© COPYRIGHT 2015 WOODROW & ASSOCIATES, INC. – ALL RIGHTS RESERVED

PLAN NORTH

Parcel Information:
TP 63-00-01108-008
Block 1 Unit 7
Deed Bk: 5658
Pg: 2573
Gross Tract:
55.5618 Acres

Record Owner:
DORIS Y & RONALD W MARKLEY REVOCABLE TRUST
2325 Chestnut Avenue
Norristown, PA 19403

Applicant:
MikeLen, LLC
Attn: Len DelGrippo
2965 W. Germantown Pike
Norristown, PA 19403

PRELIMINARY PLAN (Not To Be Recorded)

GRADING and DRAINAGE PLAN DEVELOPMENT AREA A2
MARKLEY FARM PROPERTY

WEST NORRITON TOWNSHIP – MONTGOMERY COUNTY – PENNSYLVANIA

WOODROW & ASSOCIATES, INC.
MUNICIPAL / CIVIL CONSULTING ENGINEERS
1108 North Bethlehem Pike / Suite 5 – Lower Gwynedd – PA 19002
Phone: (215) 542-5648 Fax: (215) 542-5679
Web: www.Woodrowinc.com

Layer List: Sht08_Grading-A2
Plan Date: NOV 06, 2015
Job No: 11-0410 D
Design Mgr: J.H.K.
Proj. Mgr: T.P.W.
Sheet No: 8 of 34

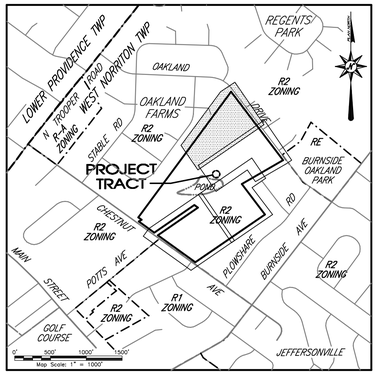

LOCATION MAP

GENERAL NOTES

Base Existing Features and Survey Notes:

Refer to Sheet 6 for all Base Existing Features and Survey Notes.

Development Notes:

Refer to Sheet 7 for all Development and Utility Notes.

PLAN FEATURES LEGEND

- Tract Boundary Line
- Legal Right-of-Way Line
- Existing Roadway Centerline
- Mapped Wetlands Limits
- Supplemental Contour (2' Interval)
- Index Contour (10' Interval)
- Existing Drive / Paving Limit
- Existing Vegetation Limit
- Existing Storm Sewer Piping
- Existing Sanitary Sewer Piping
- Existing Gas Main
- Existing Water Main / Service
- Existing Fence Line

Refer to STRUCTURE SCHEDULES & CONSTRUCTION DETAILS – SHEET 'A' (Sheet 14) for Storm Structure & Pipe Data.

Refer to PLAN and PROFILE SHEETS (Sheets 18 thru 26) for all Sanitary Sewer Structure & Pipe Data.

REVISIONS

No.:	DATE:	DESCRIPTION:

COMMONWEALTH OF PENNSYLVANIA
REGISTERED PROFESSIONAL
TIMOTHY P. WOODROW
ENGINEER
No. 038735-E

40' 0' 40' 80'
SCALE IN FEET (1" = 40'-0")

ONLY PLANS INCORPORATING A RAISED PROFESSIONAL SEAL ARE CONSIDERED TO BE OFFICIAL AND RELIED UPON BY THE USER.

THIS PLAN HAS BEEN PREPARED SPECIFICALLY FOR THE APPLICANT AND PROJECT DESIGNATED HEREON. ANY MODIFICATION, REVISION, DUPLICATION OR USE WITHOUT WRITTEN CONSENT OF WOODROW & ASSOCIATES, INC. IS PROHIBITED BY LAW.

© COPYRIGHT 2015 WOODROW & ASSOCIATES, INC. – ALL RIGHTS RESERVED

PLAN NORTH

Parcel Information:
TP 63-00-01108-008
Block 1 Unit 7
Deed Bk: 5658
Pg: 2573

Gross Tract:
55.5618 Acres

Record Owner:
DORIS Y & RONALD W MARKLEY REVOCABLE TRUST
2325 Chestnut Avenue
Norristown, PA 19403

Applicant:
MikeLen, LLC
Attn: Len DelGrippo
2965 W. Germantown Pike
Norristown, PA 19403

PRELIMINARY PLAN (Not To Be Recorded)

GRADING and DRAINAGE PLAN DEVELOPMENT AREA B1
MARKLEY FARM PROPERTY

WEST NORRITON TOWNSHIP – MONTGOMERY COUNTY – PENNSYLVANIA

WOODROW & ASSOCIATES, INC.
MUNICIPAL / CIVIL CONSULTING ENGINEERS
1108 North Bethlehem Pike / Suite 5 – Lower Gwynedd – PA 19002
Phone: (215) 542-5648 Fax: (215) 542-5679
Web: www.Woodrowinc.com

Layer List: Sht09_Grading-B1
Plan Date: NOV 06, 2015
Job No: 11-0410 D
Design Mgr: J.H.K.
Proj. Mgr: T.P.W.
Sheet No: 9 of 34

Project No: 11-0410 D Project Name: MARKLEY FARM PROPERTY Print Date: Nov 2, 2015 (15:01)

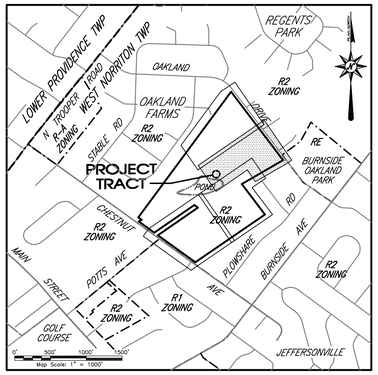

LOCATION MAP

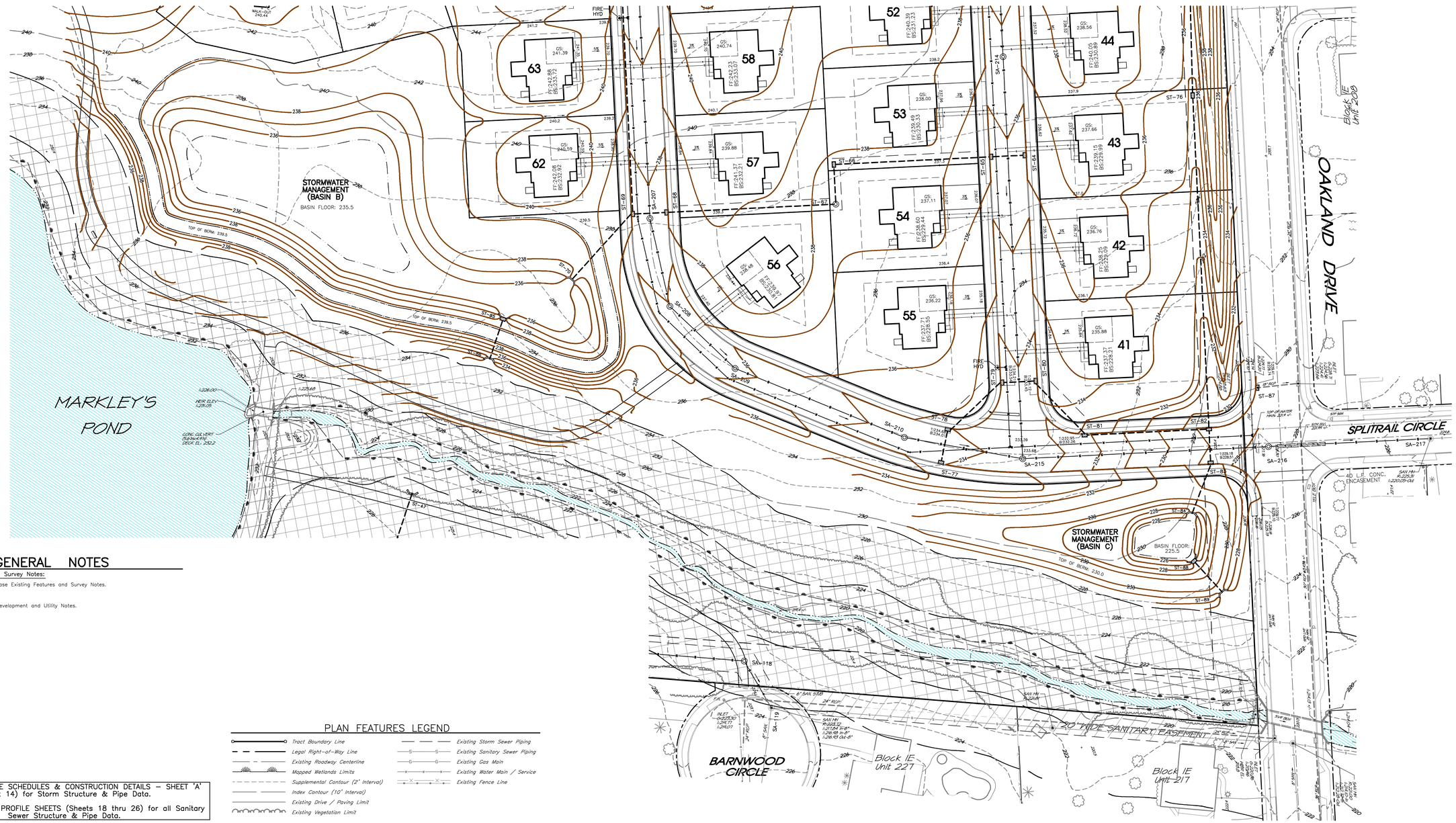

GENERAL NOTES

Base Existing Features and Survey Notes:

Refer to Sheet 6 for all Base Existing Features and Survey Notes.

Development Notes:

Refer to Sheet 7 for all Development and Utility Notes.

Refer to STRUCTURE SCHEDULES & CONSTRUCTION DETAILS – SHEET 'A' (Sheet 14) for Storm Structure & Pipe Data.

Refer to PLAN and PROFILE SHEETS (Sheets 18 thru 26) for all Sanitary Sewer Structure & Pipe Data.

PLAN FEATURES LEGEND

- Tract Boundary Line
- Legal Right-of-Way Line
- Existing Roadway Centerline
- Mapped Wetlands Limits
- Supplemental Contour (2' Interval)
- Index Contour (10' Interval)
- Existing Drive / Paving Limit
- Existing Vegetation Limit
- Existing Storm Sewer Piping
- Existing Sanitary Sewer Piping
- Existing Gas Main
- Existing Water Main / Service
- Existing Fence Line

REVISIONS

No.:	DATE:	DESCRIPTION:

COMMONWEALTH OF PENNSYLVANIA
REGISTERED PROFESSIONAL
TIMOTHY P. WOODROW
ENGINEER
No. 036735-E

SCALE IN FEET (1" = 40'-0")

PLAN NORTH

Parcel information:
TP 63-00-01108-008
Block 1 Unit 7
Deed Bk. 5658
Pg. 2573
Gross Tract: 55.5618 Acres

Record Owner:
DORIS Y & RONALD W MARKLEY REVOCABLE TRUST
1400 Dekalb Pike, Suite 1
Norristown, PA 19403

Applicant:
MikeLen, LLC
Attn: Len Delgiorno
2960 Eagle Farm Lane
Northampton, PA 19403

PRELIMINARY PLAN (Not To Be Recorded)

GRADING and DRAINAGE PLAN
DEVELOPMENT AREA B2
MARKLEY FARM PROPERTY

WEST NORRITON TOWNSHIP – MONTGOMERY COUNTY – PENNSYLVANIA

WOODROW & ASSOCIATES, INC.
MUNICIPAL CIVIL CONSULTING ENGINEERS
1108 North Bethlehem Pike, Suite 3 Lansdale, PA 19002
Phone: (215) 542-5648 Fax: (215) 542-5679
Web: www.Woodrowinc.com

Layer List: Sht10_Grading-B2
Plan Date: NOV 06, 2015
Job No: 11-0410 D
Design Mgr: J.H.K.
Proj. Mgr: T.P.W.
Sheet No: 10 of 34

© COPYRIGHT 2015 WOODROW & ASSOCIATES, INC. – ALL RIGHTS RESERVED
THIS PLAN HAS BEEN PREPARED SPECIFICALLY FOR THE APPLICANT NAMED HEREIN. THE REPRODUCTION OR USE OF THIS PLAN FOR ANY OTHER PURPOSE, OR FOR ANY OTHER LOCATION, OR FOR ANY OTHER PERSON, WITHOUT WRITTEN CONSENT OF WOODROW & ASSOCIATES, INC. IS PROHIBITED BY LAW.

Project No: 11-0410 D Project Name: MARKLEY FARM PROPERTY Print Date: Nov 2, 2015 (1:50)

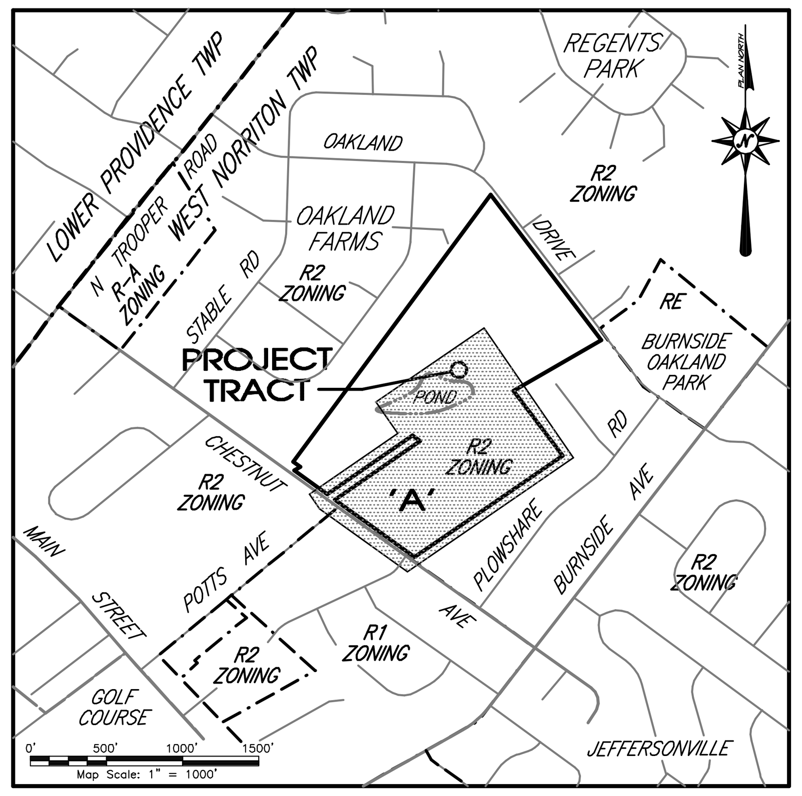

LOCATION MAP

PLANTING SCHEDULE

	Plan Symbol	Quantity	Botanical Name	Common Name	Minimum Planting Caliper	Planting Spread	Minimum Planting Height	Remarks
SHADE TREES	AR	38	Acer rubrum 'October Glory'	'October Glory' Red Maple	2"	5–6'	10–12'	B&B
	AS	33	Acer saccharum	Sugar Maple	2"	5–6'	10–12'	B&B
	LS	32	Liquidambar styraciflua 'Rotundiloba'	Sweetgum	2"	5–6'	10–12'	B&B
	PA	47	Platanus x acerfolia 'Bloodgood'	'Bloodgood' London Planetree	2"	5–6'	10–12'	B&B
	QP	47	Quercus phellos	Willow Oak	2"	5–6'	10–12'	B&B
	TC	34	Tilia cordata 'Greenspire'	'Greenspire' Littleleaf Linden	2"	5–6'	10–12'	B&B
	ZS	21	Zelkova serrata	Japanese Zelkova	2"	5–6'	10–12'	B&B
		252	TOTAL SHADE TREES					
FLOWERING TREES	AC	28	Amelanchier canadensis	Serviceberry	–	3–4'	8–10'	B&B, Multi–stem
	CC	22	Cercis canadensis	Eastern Redbud	–	3–4'	8–10'	B&B, Multi–stem
		50	TOTAL FLOWERING TREES					
EVERGREEN TREES	PI	43	Picea abies	Norway Spruce	–	3–4'	6'	B&B
	PG	41	Picea glauca	White Spruce	–	3–4'	6'	B&B
	PM	41	Psuedotsuga menziesii	Douglas Fir	–	3–4'	6'	B&B
		125	TOTAL EVERGREEN TREES					

LANDSCAPING REQUIREMENTS

Item	Requirement	Provided
SALDO Sect 22–515 Shade Trees	Shade trees shall be planted not less than 40' apart nor more than 50' apart at least 5' from right–of–way. Minimum 2" caliper.	
	Chestnut Avenue: 550/50 = 11 trees	11 Shade trees
	Oakland Drive: 1033/50 = 21 trees	21 Shade trees
	Proposed Road A: 4681/50 = 94 trees	63 Shade trees [–31]
	Proposed Road B: 1575/50 = 32 trees	26 Shade trees [– 6]
	Proposed Road C: 1290/50 = 26 trees	16 Shade trees [–10]
	Proposed Road D: 1819/50 = 37 trees	32 Shade trees [– 5]
	TOTAL REQUIRED = 221 trees	169 Shade trees [–52]
SALDO Sect 22–507.3.F. Buffer Planting	Buffer planting shall be uninterrupted coniferous planting screen of sufficient height and density to give maximum protection & immediate screening to the abutting district. Property boundaries shown without proposed plant material are satisfied by existing vegetation.	83 Shade trees 50 Flowering trees 125 Evergreen trees 258 Total trees
	TOTAL PLANTINGS PROVIDED:	252 Shade trees 50 Flowering trees 125 Evergreen trees **427 Total trees**

GENERAL NOTES

Base Existing Features and Survey Notes:

Refer to Sheet 6 for all Base Existing Features and Survey Notes.

Development Notes:

Refer to Sheet 7 for all base Development notes.

Landscaping Notes:

1. All topsoil shall be a minimum 4" in all sod areas and 8" in tree, shrub and groundcover beds, including parking lot island beds.
2. Planting behind perpendicular parking is to be located a minimum of 5' behind the curb line.
3. All landscape and grass areas are to be hand raked and left clear of all stones, rock, construction debris and any unsuitable materials.
4. Landscape contractor will locate all underground utilities prior to any excavation and planting installation.
5. All areas to be landscaped or covered with stone must be treated with a pre–emergence herbicide (surflan, dactol or approved equal) in accordance with applicable federal, state regulations and the manufacturer's instructions.
6. Landscape contractor to supply and install a pervious weed barrier (Dewitt, DuPont or approved equal) in accordance with manufacturer's installation within all landscapes, including stone and mulch beds. All weed barrier will be overlapped a minimum of 6" at all seams. At plant locations, barrier should be cut in an "X" pattern so to accommodate root ball and replaced after plant has been installed.
7. All proposed landscaping to be nursery grown, typical of their species or variety. They are to have normal vigorous root systems, free from defects and infections and in accordance with ANSI Z60.1.
8. All proposed plantings should be installed per standards of the "American Association of Nurserymen" and state nursery/ landscape associations with regard to planting, pit size, backfill mixture, staking and guying.
9. All planting containers and baskets shall be removed during planting. All plants shall be set plumb and positioned so that the top of the root collar matches, or is no more than two (2") inches above, finished grade. Replace amended backfill in 6–inch layers and compact backfill to eliminate voids. Contractor shall provide a four–inch high earthen watering saucer along the perimeter of each planting pit. Contractor shall water newly planted vegetation prior to mulching planting pit. All voids shall be filled and settling mitigated as required.
10. After initial watering and prior to mulching, contractor shall apply herbicides and pre–emergent herbicides as required to eliminate any weed seeds or plants present on root ball.
11. Seedbed Preparation:
    a. Apply limestone and fertilizer according to soil tests or fertilizer may be applied at the rate of 260 pounds per acre or 6 pounds per 1000 square feet using 10–20–10 or equivalent. In addition, 300 pounds 4–1–2 per acre or equivalent of slow release nitrogen may be used in lieu of topdressing.
    b. Work lime and fertilizer into the soil as practical to a depth of 4–inches with a disc, spring tooth harrow or other suitable equipment. The final harrowing or disking operation should be parallel to the general contour. Continue tillage until a reasonable uniform, fine seedbed is prepared. All but clay or silty soils and coarse sands should be rolled to firm the seedbed wherever feasible.
    c. Inspect seedbed just before seeding. If traffic has left the topsoil compacted, the area must be retiled and firmed as outlined below.
    d. Grass seeding mixture and application rate:

Percentage of total weight	Application Rate	Seed Type	Minimum Germination Allowed
60 %	5–7 lbs/1000 Sq. Ft.	"REBEL" Tall Fescue	90–97
35 %		"YORKTOWN" Perennial Rye	90–98
5 %		"STREEKER" Redtop	90–92

    e. In areas designated as sod, fescue sod is to be installed on minimum 4" topsoil. Areas to be sodded are to be prepared as noted above for seeded areas.
12. Plant material shall be guaranteed for one year from the date of substantial completeness. The contractor shall replace plants, dead, unhealthy, dying or damaged through loss of branches and/or foliage. Lawns that are not in good condition at the end of the guarantee period shall be repaired until a good lawn results.

It is understood that the owner shall assume responsibility for watering all plant material and lawn area beginning with the date of substantial completeness.

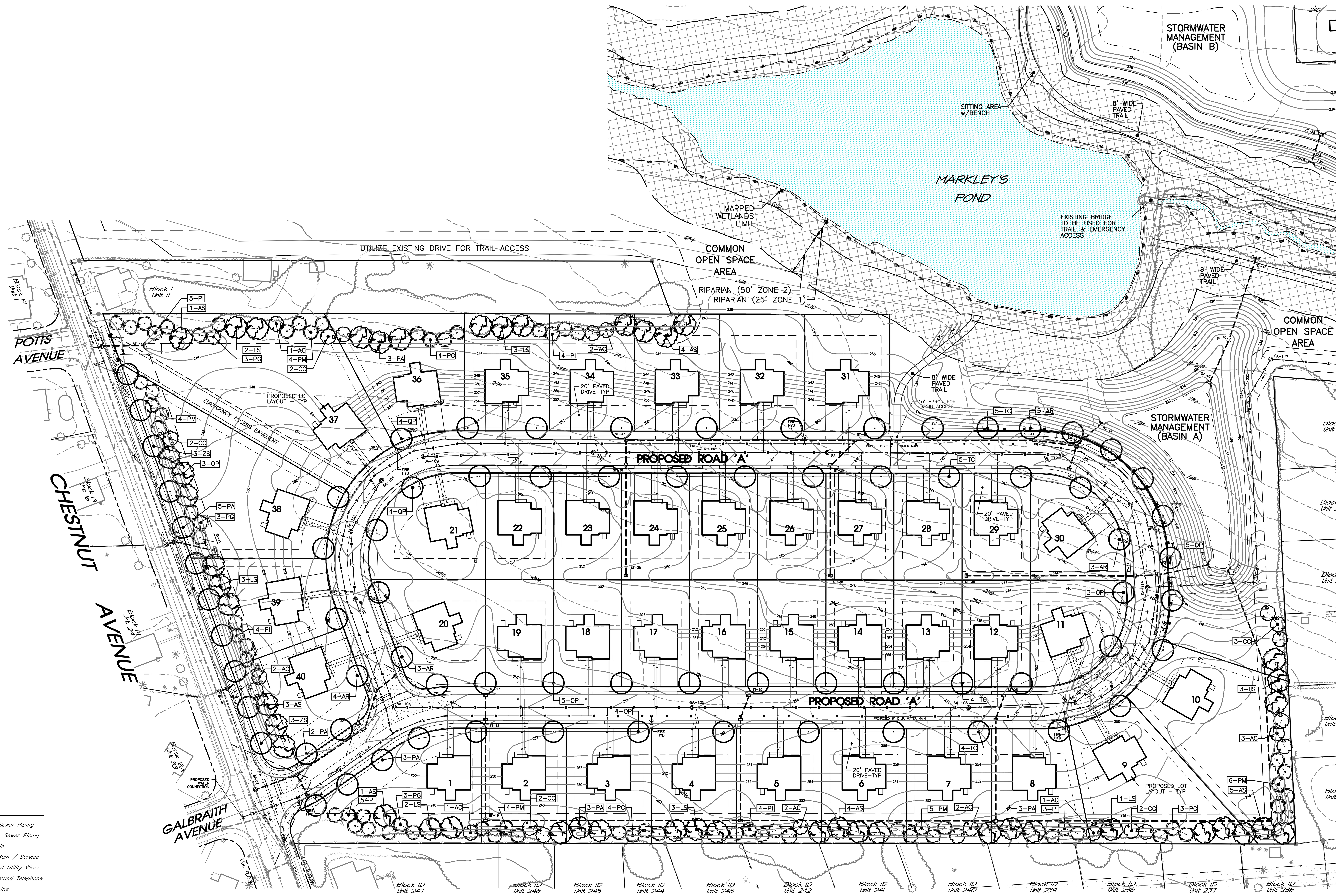

PLAN FEATURES LEGEND

Tract Boundary Line	Existing Storm Sewer Piping
Legal Right–of–Way Line	Existing Sanitary Sewer Piping
Existing Roadway Centerline	Existing Gas Main
Mapped Wetlands Limits	Existing Water Main / Service
Existing Drive / Paving Limit	Existing Overhead Utility Wires
Existing Vegetation Limit	Existing Underground Telephone
	Existing Fence Line

Project No: 11–0410 D Project Name: MARKLEY FARM PROPERTY Print Date: Nov 2, 2015 (14:54)

REVISIONS

No.:	DATE:	DESCRIPTION:

COMMONWEALTH OF PENNSYLVANIA REGISTERED PROFESSIONAL TIMOTHY P. WOODROW ENGINEER No. 038735–E

0' 60' 120' SCALE IN FEET (1" = 60'–0")

ONLY PLANS INCORPORATING A RAISED PROFESSIONAL SEAL ARE CONSIDERED TO BE OFFICIAL AND RELIED UPON BY THE USER.

THIS PLAN HAS BEEN PREPARED SPECIFICALLY FOR THE APPLICANT AND PROJECT DESIGNATED HEREON. ANY MODIFICATION, REVISION, DUPLICATION OR USE WITHOUT WRITTEN CONSENT OF WOODROW & ASSOCIATES, INC. IS PROHIBITED BY LAW.

© COPYRIGHT 2015 WOODROW & ASSOCIATES, INC. – ALL RIGHTS RESERVED

PLAN NORTH

Parcel Information:
TP 63–00–01108–008
Block 1 Unit 7
Deed Bk: 5658
Pg: 2573
Gross Tract: 55.5618 Acres

Record Owner:
DORIS Y & RONALD W MARKLEY REVOCABLE TRUST
2325 Chestnut Avenue
Norristown, PA 19403

Applicant:
MikeLen, LLC
Attn: Len DelGrippo
2965 W. Germantown Pike
Norristown, PA 19403

PRELIMINARY PLAN (Not To Be Recorded)

LANDSCAPING & LIGHTING PLAN DEVELOPMENT AREA A

MARKLEY FARM PROPERTY

WEST NORRITON TOWNSHIP – MONTGOMERY COUNTY – PENNSYLVANIA

WOODROW & ASSOCIATES, INC.
MUNICIPAL / CIVIL CONSULTING ENGINEERS
1108 North Bethlehem Pike / Suite 5 – Lower Gwynedd – PA 19002
Phone: (215) 542–5648 Fax: (215) 542–5679
Web: www.WoodrowInc.com

Layer List: Sht11_Land–A
Plan Date: NOV 06, 2015
Job No: 11–0410 D
Design Mgr:
Proj. Mgr:
Sheet No: 11 of 34

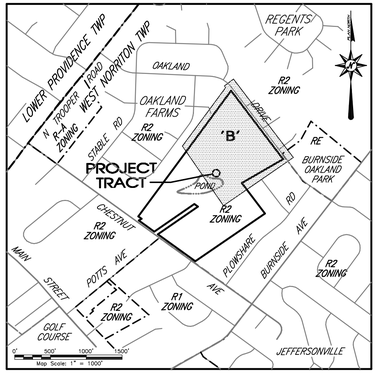

LOCATION MAP

GENERAL NOTES

Base Existing Features and Survey Notes:

Refer to Sheet 6 for all Base Existing Features and Survey Notes.

Development Notes:

Refer to Sheet 7 for all base Development notes.

Landscaping Notes:

Refer to Sheet 11 for all base Landscaping notes.

PLAN FEATURES LEGEND

- Tract Boundary Line
- Legal Right-of-Way Line
- Existing Roadway Centerline
- Mapped Wetlands Limits
- Supplemental Contour (2' Interval)
- Index Contour (10' Interval)
- Existing Soil Series Limits
- Existing Drive / Paving Limit
- Existing Vegetation Limit
- Existing Storm Sewer Piping
- Existing Sanitary Sewer Piping
- Existing Gas Main
- Existing Water Main / Service
- Existing Overhead Utility Wires
- Existing Underground Telephone
- Existing Fence Line

REVISIONS

No.:	DATE:	DESCRIPTION:

COMMONWEALTH OF PENNSYLVANIA
REGISTERED PROFESSIONAL
TIMOTHY P. WOODROW
ENGINEER
No. 036735-E

SCALE IN FEET (1" = 60'-0")

THIS PLAN HAS BEEN PREPARED SPECIFICALLY FOR THE APPLICANT NAMED HEREIN AND IS THE PROPERTY OF WOODROW & ASSOCIATES, INC. IT IS PROTECTED BY LAW.

© COPYRIGHT 2015 WOODROW & ASSOCIATES, INC. - ALL RIGHTS RESERVED

PLAN NORTH

Parcel Information:
TP 63-00-01109-008
Block 1 Unit 7
Deed Bk: 5658
Pg: 2573

Gross Tract:
55.5618 Acres

Record Owner:
DORIS Y & RONALD W MARKLEY REVOCABLE TRUST
2900 Eagle Road
Norristown, PA 19403

Applicant:
MikeLan, LLC
Attn: Len DeGrippo
2900 Eagle Road
Norristown, PA 19403

PRELIMINARY PLAN (Not To Be Recorded)

LANDSCAPING & LIGHTING PLAN
DEVELOPMENT AREA B
MARKLEY FARM PROPERTY

WEST NORRITON TOWNSHIP - MONTGOMERY COUNTY - PENNSYLVANIA

WOODROW & ASSOCIATES, INC.
MUNICIPAL CIVIL & UTILITY ENGINEERS
1100 North Bethlehem Pike, Suite 1, Lansdale, PA 19446-2002
Phone: (215) 542-5648 Fax: (215) 542-5679
Web: www.woodrowinc.com

Layer List: Sht12_Land-B
Plan Date: NOV 06, 2015
Job No: 11-0410 D
Design Mgr: J.H.K.
Proj. Mgr: T.P.W.

Project No: 11-0410 D Project Name: MARKLEY FARM PROPERTY Print Date: Nov 2, 2015 (14:54)

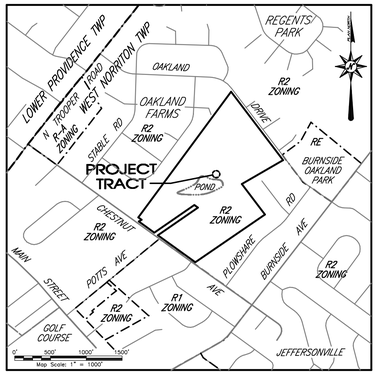

LOCATION MAP

PLAN FEATURES LEGEND

- Tract Boundary Line
- Legal Right-of-Way Line
- Existing Roadway Centerline
- Mapped Wetlands Limits
- Supplemental Contour (2' Interval)
- Index Contour (10' Interval)
- Existing Soil Series Limits
- Existing Drive / Paving Limit
- Existing Vegetation Limit
- Existing Storm Sewer Piping
- Existing Sanitary Sewer Piping
- Existing Gas Main
- Existing Water Main / Service
- Existing Overhead Utility Wires
- Existing Underground Telephone
- Existing Fence Line

GENERAL NOTES

Base Existing Features and Survey Notes:

Refer to Sheet 6 for all Base Existing Features and Survey Notes.

Development Notes:

Refer to Sheet 7 for all base Development notes.

Landscaping Notes:

Refer to Sheet 11 for all base Landscaping notes.

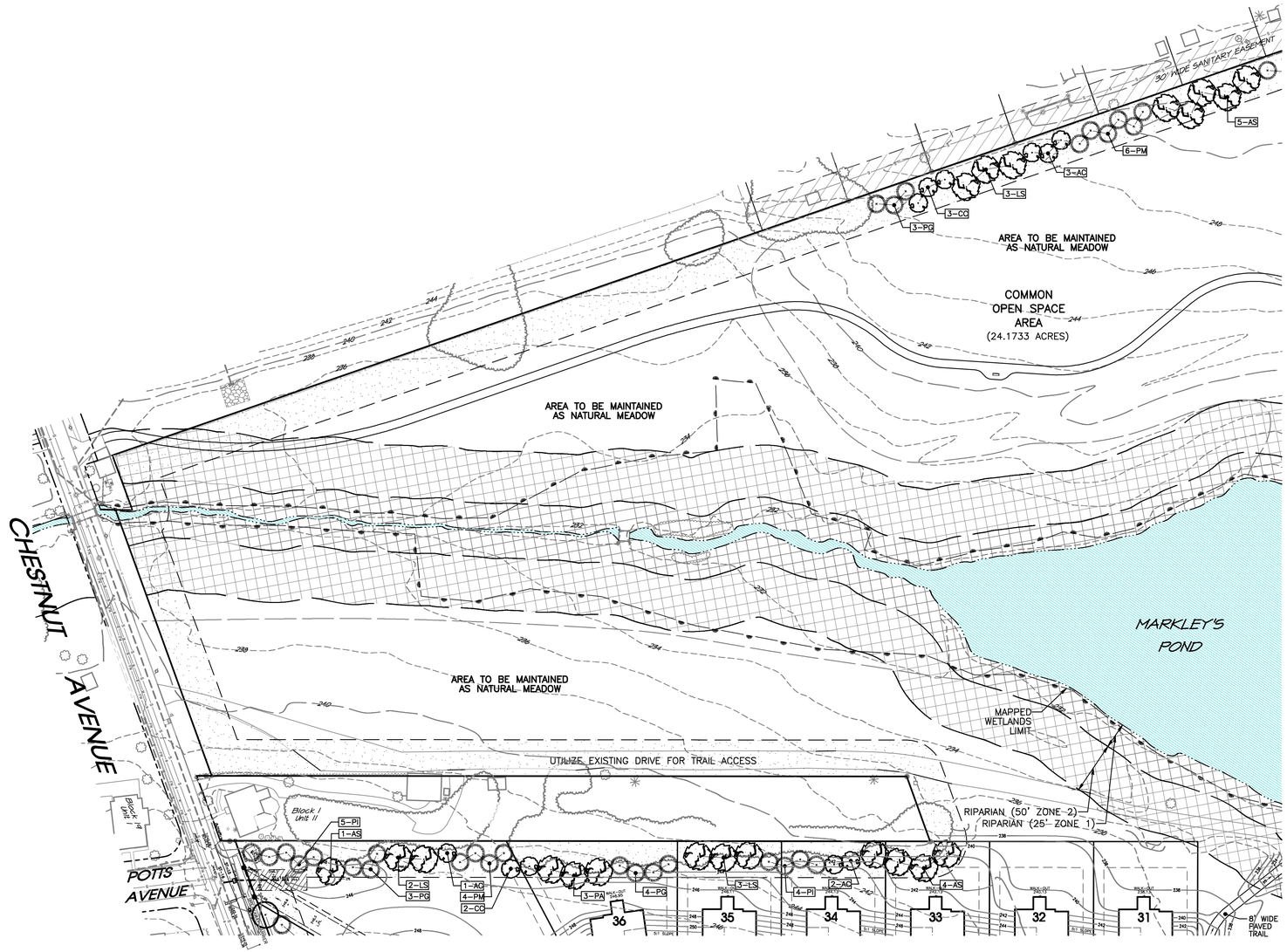

REVISIONS

No.:	DATE:	DESCRIPTION:

COMMONWEALTH OF PENNSYLVANIA
REGISTERED PROFESSIONAL
TIMOTHY P. WOODROW
ENGINEER
No. 038735-E

SCALE IN FEET (1" = 60'-0")

ONLY PLANS INCORPORATING A RAISED PROFESSIONAL SEAL ARE CONSIDERED TO BE OFFICIAL AND RELIED UPON BY THE USER.

THIS PLAN HAS BEEN PREPARED SPECIFICALLY FOR THE APPLICANT AND PROJECT DESIGNATED HEREON. ANY MODIFICATION, REVISION, DUPLICATION OR USE WITHOUT WRITTEN CONSENT OF WOODROW & ASSOCIATES, INC. IS PROHIBITED BY LAW.

© COPYRIGHT 2015 WOODROW & ASSOCIATES, INC. - ALL RIGHTS RESERVED

PLAN NORTH

Parcel Information:
TP 63-00-01108-008
Block 1 Unit 7
Deed Bk: 5658
Pg: 2573

Gross Tract:
55.5618 Acres

Record Owner:
DORIS Y & RONALD W MARKLEY REVOCABLE TRUST
2325 Chestnut Avenue
Norristown, PA 19403

Applicant:
MikeLen, LLC
Attn: Len DelGrippo
2965 W. Germantown Pike
Norristown, PA 19403

PRELIMINARY PLAN (Not To Be Recorded)

OPEN SPACE and RIPARIAN LANDSCAPING PLAN
MARKLEY FARM PROPERTY

WEST NORRITON TOWNSHIP - MONTGOMERY COUNTY - PENNSYLVANIA

WOODROW & ASSOCIATES, INC.
MUNICIPAL / CIVIL CONSULTING ENGINEERS
1108 North Bethlehem Pike / Suite 5 - Lower Gwynedd - PA 19002
Phone: (215) 542-5648 Fax: (215) 542-5679
Web: www.Woodrowinc.com

Layer List: Sht13_Land-C
Plan Date: NOV 06, 2015
Job No: 11-0410 D
Design Mgr: J.H.K.
Proj. Mgr: T.P.W.
Sheet No: 13 of 34

Project No: 11-0410 D Project Name: MARKLEY FARM PROPERTY Print Date: Nov 2, 2015 (14:52)

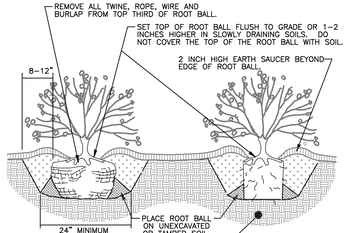

1. THREE INCHES (3") OF MULCH. DO NOT PLACE MULCH IN CONTACT WITH TREE TRUNK. MAINTAIN THE MULCH WEED–FREE FOR A MINIMUM OF THREE YEARS AFTER PLANTING.
2. PLANTS WITH POOR QUALITY ROOT BALLS OR ROOT BALLS THAT HAVE BEEN CRACKED OR DAMAGED SHALL BE REJECTED.
3. PLANTS THAT DO NOT DISPLAY THE NORMAL CHARACTERISTICS FOR THEIR SPECIES SHALL BE REJECTED.
4. DO NOT HEAVILY PRUNE THE SHRUBS AT PLANTING. PRUNE ONLY BROKEN OR DEAD BRANCHES SOME INTERIOR TWIGS AND LATERAL BRANCHES MAY BE PRUNED, HOWEVER DO NOT REMOVE THE TERMINAL BUDS OF BRANCHES THAT EXTEND TO THE EDGE OF THE CROWN.
5. MARK THE NORTH SIDE OF THE TREE IN THE NURSERY. ROTATE TREE TO FACE NORTH AT THE SITE WHEN EVER POSSIBLE.

DECIDUOUS & EVERGREEN SHRUB DETAIL

Not To Scale

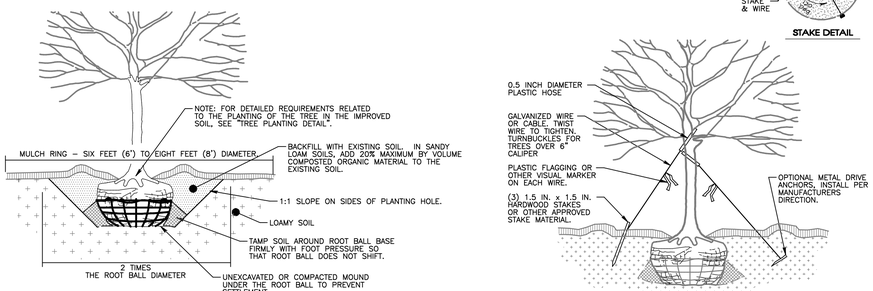

EACH TREE MUST BE PLANTED SUCH THAT THE TRUNK FLARE IS VISIBLE AT THE TOP OF THE ROOT BALL. TREES WHERE THE TRUNK FLARE IS NOT VISIBLE SHALL BE REJECTED. DO NOT COVER THE TOP OF THE ROOT BALL WITH SOIL.

LOAMY SOILS INCLUDE THE FOLLOWING USDA TEXTURAL CLASSIFICATIONS AND HAVE A CLAY CONTENT OF BETWEEN 15 TO 27%: LOAM, SANDY LOAM AND SILT LOAM. NOTE THAT SOILS AT THE OUTER LIMITS OF THE LOAM CLASSIFICATIONS MAY PRESENT SPECIAL PLANTING PROBLEMS NOT ANTICIPATED BY THIS DETAIL.

LOAMY SOILS ARE DEFINED AS GRANULAR OR BLOCKY FRIABLE SOILS, A MIXTURE OF SAND, SILT AND CLAY PARTICLES WITH A MINIMUM OF 1.5% BY DRY WEIGHT ORGANIC MATTER. THE SOIL MUST NOT BE SO COMPACTED AS TO IMPEDE ROOT GROWTH OR DRAINAGE. THE SOIL STRUCTURE SHALL NOT BE PLATY OR MASSIVE. THE SOIL MUST BE TESTED FOR TEXTURE, DRAINAGE CAPABILITY, PH, AND NUTRIENT VALUES PRIOR TO ADDING ANY SOIL IMPROVEMENTS.

TREES WITH POOR QUALITY ROOT BALLS OR ROOT BALLS THAT HAVE BEEN CRACKED OR DAMAGED SHALL BE REJECTED.

TREES THAT HAVE GROWN TOO CLOSE TOGETHER IN THE NURSERY, RESULTING IN WEAK TRUNKS SHALL BE REJECTED.

TREES WITH CENTRAL LEADER BROKEN SHALL BE REJECTED.

TREES THAT DO NOT DISPLAY THE NORMAL CHARACTERISTICS SHALL BE REJECTE

DETAIL ASSUMES THAT THE AREA OF LOAMY SOIL AVAILABLE TO EACH TREE IS A MINIMUM OF 500 S.F.

SOIL IMPROVEMENT DETAIL for TREES PLANTED IN NON RESTRICTED SOIL CONDITIONS

Not To Scale

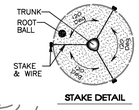

STAKE DETAIL

1. ALL STAKES SHALL BE DRIVEN OUTSIDE THE EDGE OF THE ROOT BALL.
2. ASSURE THAT THE BEARING SURFACE OF THE PROTECTIVE COVERING OF THE WIRE OR CABLE AGAINST THE TREE TRUNK IS A MINIMUM 0.5 INCH.
3. REMOVE ALL STAKING AS SOON AS THE TREE HAS GROWN SUFFICIENT ROOTS TO OVERCOME THE PROBLEM THAT REQUIRED THE TREE TO BE STAKED. STAKES SHALL BE REMOVED NO LATER THAN THE END OF THE FIRST GROWING SEASON.
4. TREES NORMALLY DO NOT NEED TO BE STAKED AND STAKING CAN BE HARMFUL TO THE TREE. STAKING SHOULD BE DONE ONLY WITH THE APPROVAL OF THE LANDSCAPE ARCHITECT IF IT IS EXPECTED THAT THE TREE WILL NOT BE ABLE TO SUPPORT ITSELF.
5. WIRE OR CABLE SIZES SHALL BE AS FOLLOWS:
   TREES UP TO 2.5 INCH CALIPER – 14 GAUGE
   TREES 2.5 INCH TO 3 INCH CALIPER – 12 GAUGE
6. TIGHTEN WIRE OR CABLE ONLY ENOUGH TO KEEP FROM SLIPPING. ALLOW FOR SOME TRUNK MOVEMENT. PLASTIC HOSE SHALL BE LONG ENOUGH TO ACCOMMODATE 1.5 INCH CALIPER OF TRUNK MOVEMENT.
7. TUCK ANY LOOSE ENDS OF THE WIRE OR CABLE INTO THE WIRE WRAP SO THAT NO SHARP WIRE ENDS ARE EXPOSED.

(FOR TREES OVER 3" CALIPER) DECIDUOUS TREE STAKING DETAIL

Not To Scale

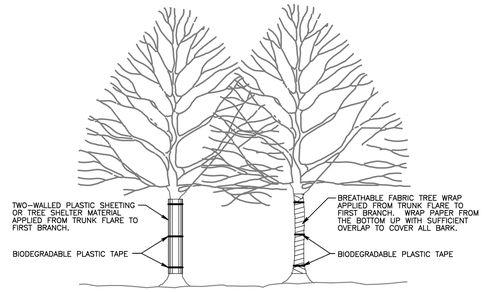

NOTES:

1. APPLY THE PLASTIC SHEETING LOOSELY AROUND THE TRUNK TO LEAVE A 0.5 INCH GAP BETWEEN THE TRUNK AND THE SHEETING.
2. THE TREE WRAP SHOULD BE INSTALLED AT TIME OF PLANTING AND BE REMOVED WHEN DIRECTED BY THE LANDSCAPE ARCHITECT, BUT NO LATER THAN 12 MONTHS AFTER PLANTING.
3. TREES WHOSE NORTH ORIENTATION IS NOT CHANGED FROM THE NURSERY DO NOT NEED TO BE WRAPPED EXCEPT TREES WITH VERY THIN BARK, SUCH AS RED MAPLE, SHOULD BE WRAPPED IF APPROVED BY THE LANDSCAPE ARCHITECT.

TREE WRAPPING DETAIL

Not To Scale

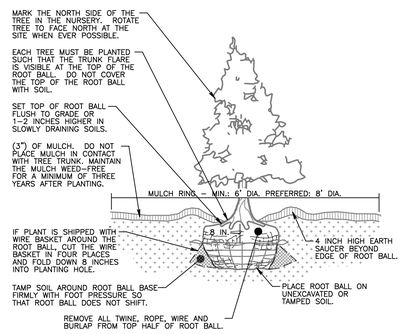

1. TREES WITH POOR QUALITY ROOT BALLS OR ROOT BALLS THAT HAVE BEEN CRACKED OR DAMAGED SHALL BE REJECTED.
2. TREES THAT HAVE GROWN TOO CLOSE TOGETHER IN THE NURSERY, RESULTING IN WEAK TRUNKS SHALL BE REJECTED.
3. TREES WITH CENTRAL LEADER BROKEN SHALL BE REJECTED.
4. TREES THAT DO NOT DISPLAY THE NORMAL CHARACTERISTICS SHALL BE REJECTED.
5. DO NOT HEAVILY PRUNE THE TREE AT PLANTING. PRUNE ONLY CROSSOVER LIMBS, CO–DOMINANT LEADERS AND BROKEN OR DEAD BRANCHES. SOME INTERIOR TWIGS AND LATERAL BRANCHES MAY BE PRUNED, HOWEVER DO NOT REMOVE THE TERMINAL BUDS OF BRANCHES THAT EXTEND TO THE EDGE OF THE CROWN.
6. STAKE TREES ONLY UPON APPROVAL FROM THE LANDSCAPE ARCHITECT. (SEE STAKING DETAIL AS APPROPRIATE)
7. REPLENISHMENT OF MULCH IS ONLY TO REPLACE MULCH LOST. MULCH DEPTH TO BE 3" MAXIMUM AND NOT INCREASED WITH ADDITIONAL LAYERS OF MULCH.

THIS DETAIL ASSUMES THAT THE PLANTING SPACE IS LARGER THAN 8 FEET SQUARE, OPEN TO THE SKY, AND NOT COVERED BY ANY PAVING OR GRATING.

DECIDUOUS TREE PLANTING DETAIL

Not To Scale

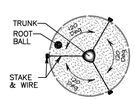

STAKE DETAIL

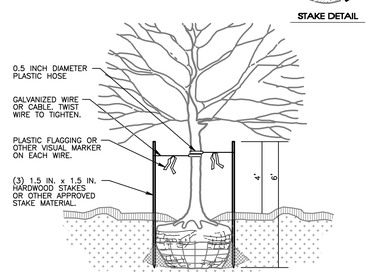

1. ALL STAKES SHALL BE DRIVEN OUTSIDE THE EDGE OF THE ROOT BALL.
2. ASSURE THAT THE BEARING SURFACE OF THE PROTECTIVE COVERING OF THE WIRE OR CABLE AGAINST THE TREE TRUNK IS A MINIMUM 0.5 INCH.
3. REMOVE ALL STAKING AS SOON AS THE TREE HAS GROWN SUFFICIENT ROOTS TO OVERCOME THE PROBLEM THAT REQUIRED THE TREE TO BE STAKED. STAKES SHALL BE REMOVED NO LATER THAN THE END OF THE FIRST GROWING SEASON.
4. TREES NORMALLY DO NOT NEED TO BE STAKED AND STAKING CAN BE HARMFUL TO THE TREE. STAKING SHOULD BE DONE ONLY WITH THE APPROVAL OF THE LANDSCAPE ARCHITECT IF IT IS EXPECTED THAT THE TREE WILL NOT BE ABLE TO SUPPORT ITSELF.
5. WIRE OR CABLE SIZES SHALL BE AS FOLLOWS:
   TREES UP TO 2.5 INCH CALIPER – 14 GAUGE
   TREES 2.5 INCH TO 3 INCH CALIPER – 12 GAUGE
6. TIGHTEN WIRE OR CABLE ONLY ENOUGH TO KEEP FROM SLIPPING. ALLOW FOR SOME TRUNK MOVEMENT. PLASTIC HOSE SHALL BE LONG ENOUGH TO ACCOMMODATE 1.5 INCH CALIPER OF TRUNK MOVEMENT.
7. TUCK ANY LOOSE ENDS OF THE WIRE OR CABLE INTO THE WIRE WRAP SO THAT NO SHARP WIRE ENDS ARE EXPOSED.

(FOR TREES 3" CALIPER AND LESS) DECIDUOUS TREE STAKING DETAIL

Not To Scale

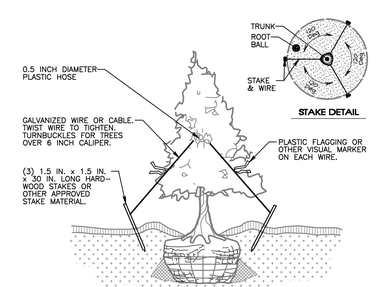

1. TREES WITH POOR QUALITY ROOT BALLS OR ROOT BALLS THAT HAVE BEEN CRACKED OR DAMAGED SHALL BE REJECTED.
2. TREES THAT HAVE GROWN TOO CLOSE TOGETHER IN THE NURSERY, RESULTING IN WEAK TRUNKS SHALL BE REJECTED.
3. TREES WITH CENTRAL LEADER BROKEN SHALL BE REJECTED.
4. TREES THAT DO NOT DISPLAY THE NORMAL CHARACTERISTICS SHALL BE REJECTED.
5. DO NOT HEAVILY PRUNE THE TREE AT PLANTING. PRUNE ONLY CROSSOVER LIMBS, CO–DOMINANT LEADERS AND BROKEN OR DEAD BRANCHES. SOME INTERIOR TWIGS AND LATERAL BRANCHES MAY BE PRUNED, HOWEVER DO NOT REMOVE THE TERMINAL BUDS OF BRANCHES THAT EXTEND TO THE EDGE OF THE CROWN.
6. STAKE TREES ONLY UPON APPROVAL FROM THE LANDSCAPE ARCHITECT. (SEE STAKING DETAIL AS APPROPRIATE)
7. REPLENISHMENT OF MULCH IS ONLY TO REPLACE MULCH LOST. MULCH DEPTH TO BE 3" MAXIMUM AND NOT INCREASED WITH ADDITIONAL LAYERS OF MULCH.

THIS DETAIL ASSUMES THAT THE PLANTING SPACE IS LARGER THAN 8 FEET SQUARE, OPEN TO THE SKY, AND NOT COVERED BY ANY PAVING OR GRATING.

EVERGREEN TREE PLANTING DETAIL

Not To Scale

1. ALL STAKES SHALL BE DRIVEN OUTSIDE THE EDGE OF THE ROOT BALL.
2. ASSURE THAT THE BEARING SURFACE OF THE PROTECTIVE COVERING OF THE WIRE OR CABLE AGAINST THE TREE TRUNK IS A MINIMUM 0.5 INCH.
3. REMOVE ALL STAKING AS SOON AS THE TREE HAS GROWN SUFFICIENT ROOTS TO OVERCOME THE PROBLEM THAT REQUIRED THE TREE TO BE STAKED. STAKES SHALL BE REMOVED NO LATER THAN THE END OF THE FIRST GROWING SEASON.
4. TREES NORMALLY DO NOT NEED TO BE STAKED AND STAKING CAN BE HARMFUL TO THE TREE. STAKING SHOULD BE DONE ONLY WITH THE APPROVAL OF THE LANDSCAPE ARCHITECT IF IT IS EXPECTED THAT THE TREE WILL NOT BE ABLE TO SUPPORT ITSELF.
5. WIRE OR CABLE SIZES SHALL BE AS FOLLOWS:
   TREES UP TO 2.5 INCH CALIPER – 14 GAUGE
   TREES 2.5 INCH TO 3 INCH CALIPER – 12 GAUGE
6. TIGHTEN WIRE OR CABLE ONLY ENOUGH TO KEEP FROM SLIPPING. ALLOW FOR SOME TRUNK MOVEMENT. PLASTIC HOSE SHALL BE LONG ENOUGH TO ACCOMMODATE 1.5 INCH CALIPER OF TRUNK MOVEMENT.
7. TUCK ANY LOOSE ENDS OF THE WIRE OR CABLE INTO THE WIRE WRAP SO THAT NO SHARP WIRE ENDS ARE EXPOSED.

EVERGREEN TREE STAKING DETAIL

Not To Scale

STORMWATER STRUCTURE SCHEDULE – DEVELOPMENT 'A'

Structure	Type	Loc	Grate	Inv
ST–01	STD INLET w/C TOP	ROAD A	244.94	(OUT)
ST–02	STD INLET w/C TOP	ROAD A	249.32	(IN) (OUT)
ST–03	STD INLET w/C TOP	ROAD A	248.79	(IN) (OUT)
ST–04	STD INLET w/C TOP	ROAD A	247.82	(OUT)
ST–05	STD INLET w/C TOP	ROAD A	247.82	(IN) (IN) (OUT)
ST–06	STM MH	CHESTNUT AVE	247.97	(IN) (OUT)
ST–07	STM MH	CHESTNUT AVE	247.85	(IN) (IN) (OUT)
ST–08	STD INLET w/M TOP	LOT 40	247.90	(OUT)
ST–09	STD INLET w/C TOP	CHESTNUT AVE	247.02	(IN) (OUT)
ST–10	Type: EX. BOX w/MH TOP	CHESTNUT AVE	Rim: 247.19	(IN) (EX IN) (EX IN) (EX OUT)
ST–11	STD INLET w/M TOP	LOT 38	247.90	(OUT)
ST–12	STD INLET w/C TOP	CHESTNUT AVE	246.33	(IN) (OUT)
ST–13	*Type: EX. BOX w/MH TOP*	CHESTNUT AVE	Rim: 246.51	(IN) *(IN) (EX IN)* *(EX IN)* *(EX OUT)*
ST–14	TYPE DW ENDWALL	LOT 37	247.10	244.10 (OUT)
ST–15	Type: STD INLET w/M TOP	CHESTNUT AVE	244.60	(IN) (OUT)
ST–16	*Type: EX. STM MH*	CHESTNUT AVE	*Rim: 244.76*	(IN) *(EX IN)* *(EX IN)* *(EX OUT)*
ST–17	STD INLET w/C TOP	ROAD A	250.23	(OUT)
ST–18	STD INLET w/C TOP	ROAD A	250.23	(IN) (OUT)
ST–19	STD INLET w/M TOP	LOT 2	245.60	(IN) (IN) (OUT)
ST–20	STD INLET w/C TOP	ROAD A	253.32	(OUT)
ST–21	STD INLET w/C TOP	ROAD A	253.23	(IN) (IN) (OUT)
ST–22	STD INLET w/M TOP	LOT 5	249.70	(IN) (IN) (OUT)
ST–23	STD INLET w/C TOP	ROAD A	252.32	(OUT)
ST–24	STD INLET w/C TOP	ROAD A	252.59	(IN) (OUT)
ST–25	STD INLET w/M TOP	LOT 8	249.50	(IN) (IN) (OUT)
ST–26	STD INLET w/M TOP	LOT 9	247.00	(IN) (OUT)
ST–27	STD INLET w/M TOP	LOT 10	247.60	(IN) (OUT)
ST–28	STD STM MH	OPEN SPACE	249.33	(IN) (OUT)
ST–29	TYPE DW ENDWALL	OPEN SPACE	234.50	231.50 (OUT)
ST–30	STD INLET w/M TOP	LOT 29	242.63	(IN) (OUT)
ST–31	STD INLET w/C TOP	ROAD A	242.90	(IN) (OUT)
ST–32	STD INLET w/C TOP	ROAD A	245.14	(OUT)
ST–33	STD INLET w/C TOP	ROAD A	242.90	(IN) (IN) (OUT)
ST–34	TYPE DW ENDWALL	OPEN SPACE	234.50	231.50 (OUT)
ST–35	STD INLET w/M TOP	LOT 24	250.50	(OUT)
ST–36	STD INLET w/C TOP	ROAD A	249.31	(IN) (OUT)
ST–37	STD INLET w/C TOP	ROAD A	249.31	(IN) (OUT)
ST–38	STD INLET w/M TOP	LOT 27	245.70	(IN) (OUT)
ST–39	STD INLET w/C TOP	ROAD A	244.51	(IN) (IN) (OUT)
ST–40	STD INLET w/C TOP	ROAD A	243.93	(IN) (IN) (OUT)
ST–41	STD INLET w/C TOP	ROAD A	240.01	(IN) (IN) (OUT)
ST–42	STD INLET w/C TOP	ROAD A	239.82	(IN) (OUT)
ST–43	STD INLET w/C TOP	ROAD A	239.79	(IN) (IN) (OUT)
ST–44	TYPE DW ENDWALL	OPEN SPACE	235.50	232.50 (OUT)
ST–45	TYPE OUTLET STRUCTURE	BASIN 'A'		(IN) (OUT)
ST–46	STM MH	BASIN 'A'	236.05	(IN) (OUT)
ST–47	TYPE DW ENDWALL	OPEN SPACE	227.75	224.75 (OUT)

STORMWATER PIPING SCHEDULE – DEVELOPMENT 'A'

PIPE RUN:			PIPE SIZE:	PIPE LENGTH (L.F.):	PIPE MATERIAL:	PIPE SLOPE (%):
ST–01	to	ST–02	18"	28	ADS (N–12)	0.50% (Min)
ST–02	to	ST–03	18"	47	ADS (N–12)	0.50% (Min)
ST–03	to	ST–05	18"	95	ADS (N–12)	0.50% (Min)
ST–04	to	ST–05	18"	28	ADS (N–12)	0.50% (Min)
ST–05	to	ST–07	18"	51	ADS (N–12)	0.50% (Min)
ST–06	*to*	*ST–07*	*18"*	*33*	*EX RCP*	*0.50% (Min)*
ST–08	to	ST–09	18"	45	ADS (N–12)	0.50% (Min)
ST–09	to	ST–10	18"	8	ADS (N–12)	0.50% (Min)
ST–11	to	ST–12	18"	50	ADS (N–12)	0.50% (Min)
ST–12	to	ST–13	18"	8	ADS (N–12)	0.50% (Min)
ST–14	to	ST–15	18"	50	ADS (N–12)	0.50% (Min)
ST–15	to	ST–16	18"	11	ADS (N–12)	0.50% (Min)
ST–17	to	ST–18	18"	27	ADS (N–12)	0.50% (Min)
ST–18	to	ST–19	18"	119	ADS (N–12)	0.50% (Min)
ST–20	to	ST–21	18"	29	ADS (N–12)	0.50% (Min)
ST–21	to	ST–22	18"	119	ADS (N–12)	0.50% (Min)
ST–22	to	ST–24	18"	300	ADS (N–12)	0.50% (Min)
ST–23	to	ST–24	18"	29	ADS (N–12)	0.50% (Min)
ST–24	to	ST–25	18"	119	ADS (N–12)	0.50% (Min)
ST–22	to	ST–25	18"	300	ADS (N–12)	0.50% (Min)
ST–25	to	ST–26	18"	124	ADS (N–12)	0.50% (Min)
ST–26	to	ST–27	18"	198	ADS (N–12)	0.50% (Min)
ST–27	to	ST–28	18"	181	ADS (N–12)	0.50% (Min)
ST–28	to	ST–29	18"	120	ADS (N–12)	0.50% (Min)
ST–30	to	ST–31	18"	198	ADS (N–12)	0.50% (Min)
ST–31	to	ST–33	18"	27	ADS (N–12)	0.50% (Min)
ST–32	to	ST–33	18"	68	ADS (N–12)	0.50% (Min)
ST–33	to	ST–34	18"	60	ADS (N–12)	0.50% (Min)
ST–35	to	ST–36	18"	130	ADS (N–12)	0.50% (Min)
ST–36	to	ST–37	18"	27	ADS (N–12)	0.50% (Min)
ST–37	to	ST–40	18"	268	ADS (N–12)	0.50% (Min)
ST–38	to	ST–39	18"	130	ADS (N–12)	0.50% (Min)
ST–39	to	ST–40	18"	40	ADS (N–12)	0.50% (Min)
ST–40	to	ST–41	18"	211	ADS (N–12)	0.50% (Min)
ST–41	to	ST–43	18"	49	ADS (N–12)	0.50% (Min)
ST–42	to	ST–43	18"	27	ADS (N–12)	0.50% (Min)
ST–43	to	ST–44	18"	41	ADS (N–12)	0.50% (Min)
ST–45	to	ST–46	18"	55	RCP (O–RING)	0.50% (Min)
ST–46	to	ST–47	18"	102	RCP (O–RING)	0.50% (Min)

STORMWATER STRUCTURE SCHEDULE – DEVELOPMENT 'B'

Structure	Type	Loc	Grate	Inv
ST–50	STD INLET w/C TOP	ROAD B	245.10	(OUT)
ST–51	STD INLET w/C TOP	ROAD B	245.10	(IN) (OUT)
ST–52	STD INLET w/C TOP	ROAD B	243.07	(IN) (IN) (OUT)
ST–53	STD INLET w/C TOP	ROAD D	241.27	(IN) (IN) (OUT)
ST–54	STD INLET w/C TOP	ROAD B	241.34	(OUT)
ST–55	STD INLET w/C TOP	ROAD B	241.34	(IN) (OUT)
ST–56	STD INLET w/C TOP	ROAD B	240.08	(OUT)
ST–57	STD INLET w/C TOP	ROAD B	240.08	(IN) (IN) (OUT)
ST–58	STD INLET w/C TOP	ROAD C	238.16	(OUT)
ST–59	STD INLET w/M TOP	ROAD C	238.16	(IN) (IN) (OUT)
ST–60	STD INLET w/M TOP	LOT 51	240.81	(IN) (IN) (OUT)
ST–61	STD STM MH	LOT 51	Rim: 240.63	(IN) (OUT)
ST–62	STD INLET w/C TOP	ROAD D	240.03	(IN) (OUT)
ST–63	STD INLET w/C TOP	ROAD D	240.03	(IN) (IN) (IN) (OUT)
ST–64	STD INLET w/C TOP	ROAD C	235.57	(OUT)
ST–65	STD INLET w/C TOP	ROAD C	235.57	(IN) (OUT)
ST–66	STD INLET w/M TOP	LOT 53	237.89	(IN) (IN) (OUT)
ST–67	STD STM MH	LOT 54	237.70	(IN) (IN) (OUT)
ST–68	STD INLET w/C TOP	ROAD D	237.48	(IN) (OUT)
ST–69	STD INLET w/C TOP	ROAD D	237.48	(IN) (IN) (IN) (OUT)
ST–70	TYPE DW ENDWALL	BASIN 'B'	238.50	235.50 (OUT)
ST–71	STD INLET w/C TOP	SET NEW BOX TO CURB	Gr: 240.21	*236.63 (IN)* *236.46 (OUT)*
ST–72	STD INLET w/C TOP	ROAD B	239.26	(OUT)
ST–73	STD INLET w/C TOP	ROAD B	239.64	(IN) (OUT)
ST–74	STD INLET w/C TOP	ROAD B	239.64	(IN) (OUT)
ST–75	STD INLET w/M TOP	LOT 46	237.90	(IN) (OUT)
ST–76	STD INLET w/M TOP	LOT 43	234.80	(IN) (OUT)
ST–77	STD INLET w/C TOP	ROAD D	234.06	(OUT)
ST–78	STD INLET w/C TOP	ROAD D	234.06	(IN) (OUT)
ST–79	STD INLET w/C TOP	ROAD C	233.59	(IN) (OUT)
ST–80	STD INLET w/C TOP	ROAD C	233.59	(IN) (OUT)
ST–81	STD INLET w/C TOP	ROAD D	232.20	(IN) (OUT)
ST–82	STD INLET w/C TOP	ROAD D	228.71	(IN) (OUT)
ST–83	STD INLET w/C TOP	ROAD D	228.71	(IN) (OUT)
ST–84	TYPE DW ENDWALL	BASIN 'C'		225.50 (OUT)
ST–85	TYPE OUTLET STRUCTURE	BASIN 'B'		235.50 (IN) (OUT)
ST–86	TYPE DW ENDWALL	OPEN SPACE	235.50	232.50 (OUT)
ST–87	STD INLET w/C TOP	SET NEW BOX TO CURB	Loc: OAKLAND DRIVE	*224.88 (OUT)*
ST–88	TYPE OUTLET STRUCTURE	BASIN 'C'		225.50 (IN) (OUT)
ST–89	TYPE DW ENDWALL	OPEN SPACE	229.50	226.50 (OUT)

STORMWATER PIPING SCHEDULE – DEVELOPMENT 'B'

PIPE RUN:			PIPE SIZE:	PIPE LENGTH (L.F.):	PIPE MATERIAL:	PIPE SLOPE (%):
ST–50	to	ST–51	18"	27	ADS (N–12)	0.50% (Min)
ST–51	to	ST–52	18"	135	ADS (N–12)	0.50% (Min)
ST–52	to	ST–53	18"	60	ADS (N–12)	0.50% (Min)
ST–54	to	ST–55	18"	27	ADS (N–12)	0.50% (Min)
ST–56	to	ST–57	18"	27	ADS (N–12)	0.50% (Min)
ST–55	to	ST–57	18"	110	ADS (N–12)	0.50% (Min)
ST–58	to	ST–59	18"	27	ADS (N–12)	0.50% (Min)
ST–59	to	ST–60	18"	131	ADS (N–12)	0.50% (Min)
ST–57	to	ST–60	18"	200	ADS (N–12)	0.50% (Min)
ST–60	to	ST–61	18"	23	ADS (N–12)	0.50% (Min)
ST–53	to	ST–63	18"	123	ADS (N–12)	0.50% (Min)
ST–61	to	ST–62	18"	141	ADS (N–12)	0.50% (Min)
ST–62	to	ST–63	18"	27	ADS (N–12)	0.50% (Min)
ST–63	to	ST–69	18"	255	ADS (N–12)	0.50% (Min)
ST–64	to	ST–65	18"	27	ADS (N–12)	0.50% (Min)
ST–65	to	ST–66	18"	131	ADS (N–12)	0.50% (Min)
ST–66	to	ST–67	18"	33	ADS (N–12)	0.50% (Min)
ST–67	to	ST–68	18"	141	ADS (N–12)	0.50% (Min)
ST–68	to	ST–69	18"	27	ADS (N–12)	0.50% (Min)
ST–69	to	ST–70	18"	75	ADS (N–12)	0.50% (Min)
ST–72	to	ST–73	18"	23	ADS (N–12)	0.50% (Min)
ST–73	to	ST–74	18"	27	ADS (N–12)	0.50% (Min)
ST–74	to	ST–75	18"	217	ADS (N–12)	0.50% (Min)
ST–75	to	ST–76	18"	255	ADS (N–12)	0.50% (Min)

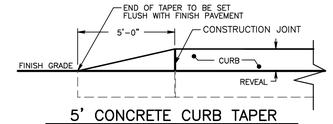

5' CONCRETE CURB TAPER

Not To Scale

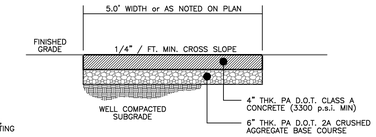

CONCRETE SIDEWALK

Not To Scale

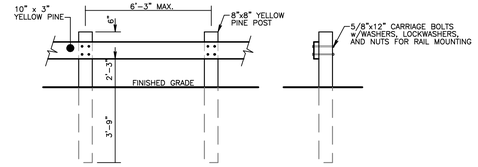

NOTES:

1. POST AND RAILS SHALL BE PRESSURE TREATED WITH WATER-BORNE PRESERVATIVES, CCA TREATMENT (LP-22) @ 0.40 PCF. (40 YEAR)
2. ALL MOUNTING HARDWARE SHALL BE IN ACCORDANCE W/ ASTM-A307 AND GALVANIZED IN ACCORDANCE WITH ASTM-A135 OR ASTM-B454.
3. ENDS OF GUARDRAIL TO BE ANGLED 10. PER SECTION AWAY FROM PROPOSED DRIVEWAY ℄. TWO (2) SECTIONS SHALL COMPRISE EACH END. (20%D ANGLE TOTAL)

TIMBER GUIDE RAIL

Not To Scale

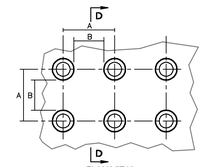

PLAN VIEW

TRUNCATED DOME DIMENSIONS				
DIM	MIN mm	(inch)	MIN mm	(inch)
A	41	(1.6")	61	(2.4")
B	17	(0.65")	37	(1.5")
C	(13)		(13)	
D	23	(0.9")	36	(1.4")

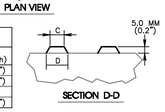

SECTION D-D

(13) The C Dimension is 50% to 65% of the D Dimension

(14) Place adjacent DWS Tiles with Manufactured Surface to Manufactured Surface. Cut Tiles along the perimeter only.

(24) Locate one corner of the DWS at the back of the curb. No other point on the leading edge of the DWS may be more than 1525 (60") away from the back of the curb.

DETECTABLE WARNING SURFACE (DWS) TRUNCATED DOME DETAIL

Not To Scale

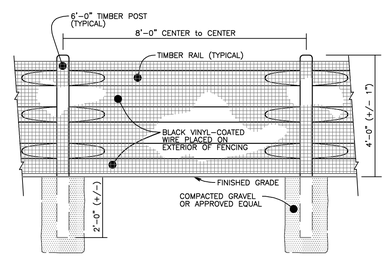

FENCING NOTES:

1. TIMBER POSTS AND RAILS SHALL BE PRESSURE TREATED WITH WATER-BORNE PRESERVATIVES, CCA TREATMENT (LP-22) @ 0.40 pcf (40 YEAR) OR APPROVED EQUAL.
2. FENCE SHALL BE NOT LESS THAN 4 FEET IN HEIGHT.
3. WIRE MATERIAL SHALL BE NINE (9) GAUGE WIRE AND A MAXIMUM OF TWO (2) INCHES APART. WIRE SHALL NOT BE ATTACHED TO THE EXTERIOR SIDE OF THE FENCE AND NOT BE FREE STANDING.
4. FENCE SHALL CONTAIN NO VERTICAL INTERSPACE OF MORE THAN TWO (2) INCHES, AND NO HORIZONTAL RAIL OR COMPONENT ON THE OUTSIDE USABLE AS A FOOTSTEP.
5. GATES: SHALL BE SELF-CLOSING AND SELF-LATCHING, AND ANY SUCH LATCHES SHALL BE LOCKED FROM THE EXTERIOR WITH ACCESS GAINED ONLY BY KEY OR COMBINATION MECHANISM. ANY SUCH LOCK SHALL BE SET AT LEAST THREE and ONE-HALF (3.5) FEET FROM THE GROUND.

BASIN PERIMETER FENCE DETAIL

Not To Scale

TYPICAL EXPANSION JOINT DETAIL

Not To Scale

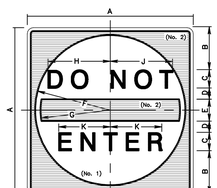

COLORS LEGEND:

LEGEND (No. 1):	WHITE	(REFLECTORIZED)
BACKGROUND:	RED	(REFLECTORIZED)
BACKGROUND (No. 2):	WHITE	(REFLECTORIZED)

SIGN SIZE	DIMENSIONS A	B	C	D	E	F	G	H	J	K	SERIES LINES Z	K	BLANK STD
30 x 30	30	6 1/2	4	2	5	14 1/2	12 1/2	9 3/4	10	7 7/8	D	D	B3-30
36 x 36	36	7 1/2	5	2 1/2	6	17 1/2	15	12	12 3/8	9 13/16	D	D	B3-36
48 x 48	48	11	6	3	8	23 1/2	20	14 1/2	15	11 3/4	D	D	B3-48

SIGN SHALL MEET THE REQUIREMENTS OF PUBLICATION 68, SECTION 211.181.

(R5-1) DO NOT ENTER SIGN

Not To Scale

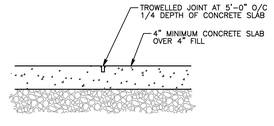

TYPICAL CONTROL JOINT DETAIL

Not To Scale

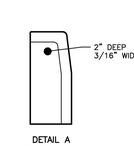

DETAIL A
CONTRACTION JOINT

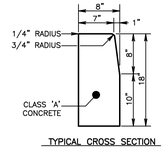

TYPICAL CROSS SECTION

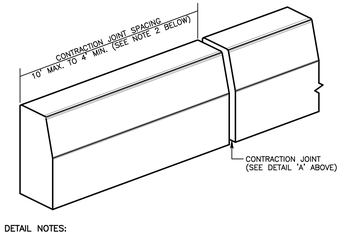

DETAIL NOTES:

1. MATERIALS AND CONSTRUCTION SHALL MEET THE REQUIREMENTS OF PUBLICATION 408, SECTION 630 FOR PLAIN CEMENT CONCRETE CURB. SECTION 640 FOR PLAIN CEMENT CONCRETE GUTTER AND SECTION 641 FOR PLAIN CEMENT CONCRETE CURB GUTTER.
2. SPACE CONTRACTION JOINTS IN UNIFORM LENGTHS OR SECTIONS.
3. PLACE 3/4 INCH PREMOLDED EXPANSION JOINT FILLER MATERIAL AT STRUCTURES AND AT THE END OF THE WORK DAY. CUT MATERIAL TO CONFORM TO AREA ADJACENT TO CURB OR TO CONFORM TO CROSS SECTIONAL AREA OF CURB.

PLAIN CONCRETE CURB

Not To Scale

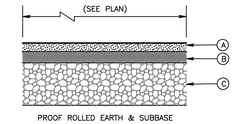

PROOF ROLLED EARTH & SUBBASE

(A) = 2" SUPERPAVE VOLUMETRIC ASPHALT MIXTURE DESIGN, 9.5mm, PG 64-22, HMA WEARING COURSE, 3-10M ESALS, SRL-H

(B) = 4" SUPERPAVE VOLUMETRIC ASPHALT MIXTURE DESIGN, 25mm, PG 64-22, HMA BASE COURSE, 3-10M ESALS

(C) = 6" 2A MODIFIED SUBBASE ON GEOTEXTILE CLASS IV

1. THIS PAVING SECTION IS TO BE USED FOR ALL INTERIOR SITE UNIT DRIVEWAYS, EMERGENCY ACCESS DRIVEWAY AND FOR THE Block 44 Units 8, 33 & 42 DRIVEWAY RECONSTRUCTION.
2. SEE LOOP ROAD CROSS-SECTION DETAIL BELOW FOR INTERIOR ROADWAY AND SITE ENTRANCE PAVING SECTION.

PROJECT PAVING SECTION

Not To Scale

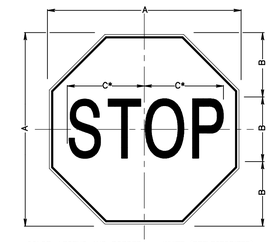

COLOR: LEGEND AND BORDER — WHITE (REFLECTORIZED)
BACKGROUND — RED (REFLECTORIZED)

SIGN SIZE	DIMENSIONS A	B	C*	SER-IES	BOR-DER	BLANK STUD
24 x 24	24	8	10	C	3/8	B1-24
30 x 30	30	10	12½	C	3/8	B1-30
36 x 36	36	12	15	C	3/8	B1-36
48 x 48	48	16	20	C	1½	B1-48

* REDUCE SPACING BY 40%

SIGN SHALL MEET THE REQUIREMENTS OF PUBLICATION 58, SECTION 211.52

(R1-1) STOP SIGN DETAIL

Not To Scale

No.:	DATE:	DESCRIPTION:

REVISIONS

0'

THIS PLAN HAS BEEN PREPARED SPECIFICALLY FOR THE APPLICANT AND FOR THE PROJECT SHOWN. THE USE OF THIS PLAN BY ANYONE OTHER THAN THE APPLICANT OR FOR ANY OTHER PROJECT IS PROHIBITED. REPRODUCTION OF THIS PLAN, IN WHOLE OR IN PART, WITHOUT WRITTEN CONSENT OF WOODROW & ASSOCIATES, INC. IS PROHIBITED BY LAW.

© COPYRIGHT 2015 WOODROW & ASSOCIATES, INC. - ALL RIGHTS RESERVED

Parcel Information:
TP 63-00-01109-008
Block: 1 Unit: 7
Deed Bk: 5658
Pg: 2573
Gross Tract: 55.5618 Acres

Record Owner:
DORIS Y & RONALD W MARKLEY REVOCABLE TRUST
2400 Stump Road
Norristown, PA 19403

Applicant:
Mikelen, LLC
Attn: Lee DeGrippo
2400 Stump Road
Norristown, PA 19403

PRELIMINARY PLAN (Not To Be Recorded)

CONSTRUCTION DETAILS - SHEET B

MARKLEY FARM PROPERTY

WEST NORRITON TOWNSHIP - MONTGOMERY COUNTY - PENNSYLVANIA

WOODROW & ASSOCIATES, INC.
MUNICIPAL CIVIL CONSULTING ENGINEERS
1108 Westtown Road, P.O. Box 214, West Chester, PA 19382
Phone: (215) 542-5646 Fax: (215) 542-5679
Web: www.Woodrowinc.com

Layer List: Sht15_Detail-B
Plan Date: NOV 06, 2015
Job No: 11-0410 D
Design Mgr: J.H.K.
Proj. Mgr: T.P.W.
Sheet No: 15 of 34

Project No: 11-0410 D Project Name: MARKLEY FARM PROPERTY Print Date: Nov 2, 2015 (14:51)

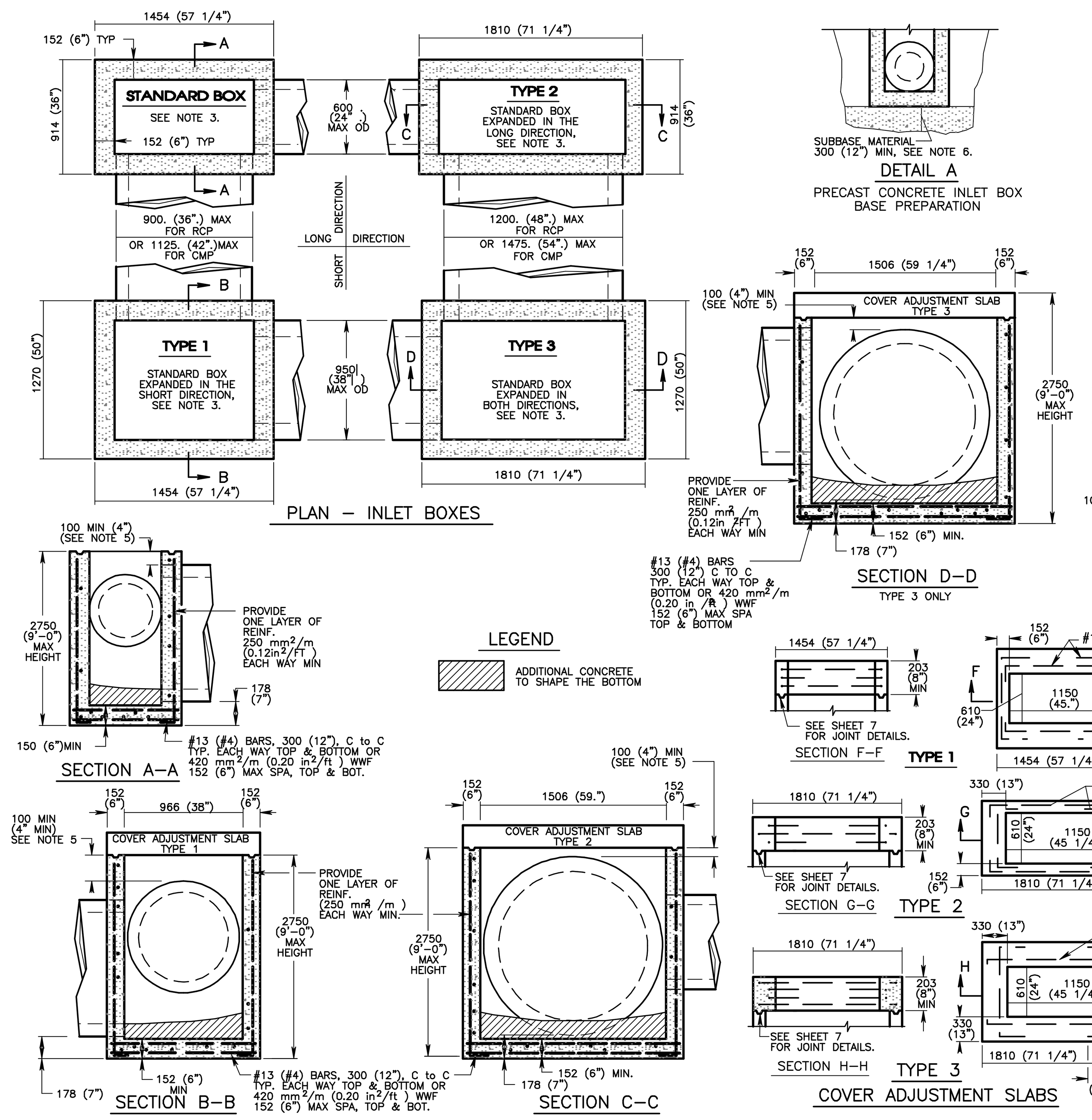

PennDOT – RC-34M – STANDARD (PRECAST) INLET BOXES

Not To Scale

NOTES

1. Construct inlet boxes in accordance with the requirements of Publication 408, section 714.
2. Permit only precast inlet boxes supplied by a manufacturer listed in bulletin 15. Use Class AA cement concrete for precast boxes. For deviations or modifications of the standards, submit shop drawings for approval.
3. Provide standard inlet boxes and cover adjustment slabs with a 610 x 1150 (24"x46") opening to accommodate standard top components.
4. For inlets that deviate from the standard submit special details and design for the inlet walls and base to the Bureau of Construction for review and approval. Construct inlets that exceed 1500 (5') in height with steps similar to manholes (See RC–39m). For inlets other than as shown on the standards, provide reinforcement based on PHL 93 (HS 25) loading and in accordance with publication 408.
5. Locate pipe or pipes, as indicated, with the inlet bottom shaped to channel the flow toward the outlet pipe. When project conditions require pipe blockouts to be formed within 100 (4") from the top of the inlet box, provide an additional #10 (#3) reinforement bar located 40 (1 5/8") from the top of the inlet base, full width along the inlet face. Remove any visible portion of the bar, if required during installation and prior to joining the pipe to the inlet. If reinforced concrete pipe is used, the pipe blockout may be formed 'flush' with the inlet base. Limit pipe blockout of wall to 25 mm (1").
6. Place subbase material meeting the requirements of Publication 408, Section 350.2, in layers 100 (4") thick, compacted to a density satisfactory to the engineer and incidental to the inlet pay item.
7. For pipe diameters larger than 1200 (48") RCP or 1350 (54") CMP, use a modified inlet box.
8. Provide construction joints as required for inlet boxes that are not monolithic. See Details A & B of RC–34m – Sheet 7.
9. Tapers may be provided on vertical faces of precast inlet box base units to facilitate form stripping. Tapers will result in internal bottom dimensions that vary to a maximum of 25 mm (1").
10. Provide suitable lifting devices for handling and installation. Galvanize metal devices as specified in pub. 408 section 1105. Tapers may be provided on inside vertical faces of precast inlet tops to facilitate form stripping. tapers will result in internal bottom dimensions that vary to a maximum of 25 mm (1").

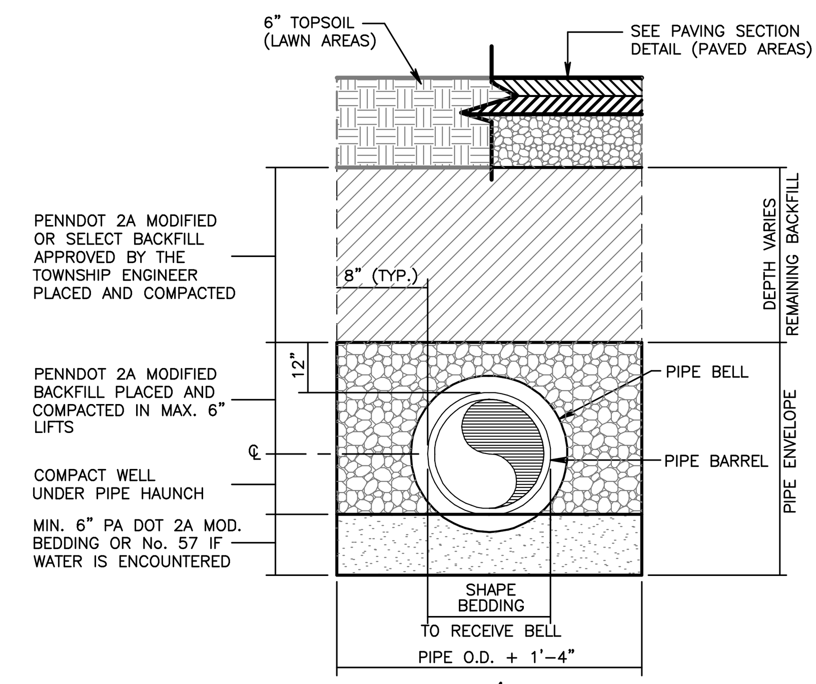

STORM SEWER BEDDING/TRENCH DETAIL

Not To Scale

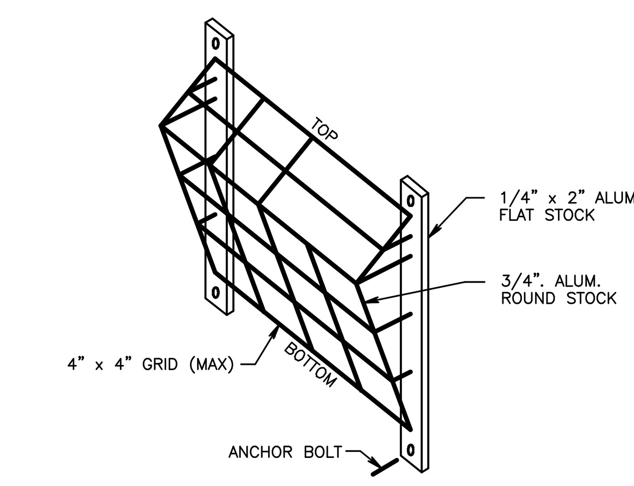

OUTLET STRUCTURE TRASH RACK DETAIL

Not to Scale

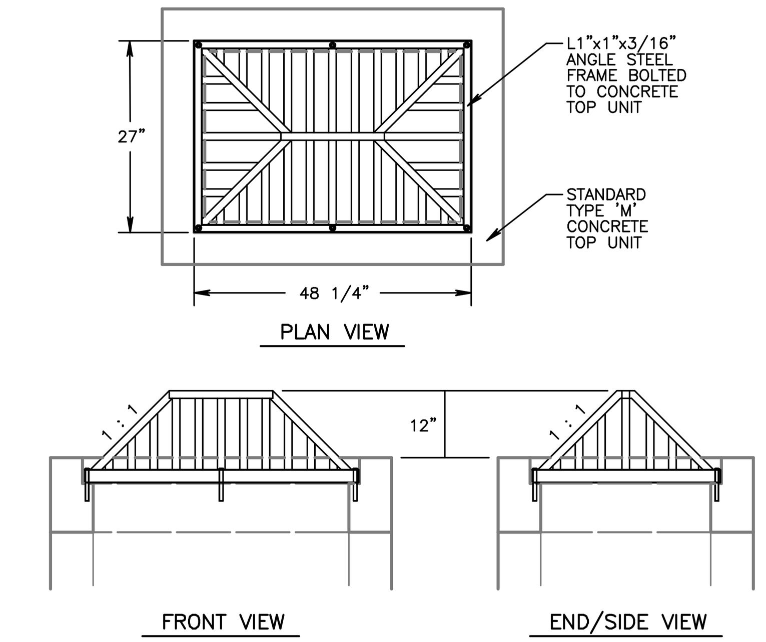

1. TRASH GRATE: L1"x1"x3/16" ANGLE STEEL FRAME w/5/8" DIA. STEEL GRATE BARS AT 4 1/2" O.C. (Max) PAINTED WITH ANTI–RUST COMPOUNDS.
2. ATTACH TO CONCRETE TOP WITH (6) 3/8" x 2" LAG BOLTS SET IN LEAD EXPANDERS.
3. WELD ALL GRATE BAR CONNECTIONS.
4. SIZE TRASH GRATE TO FIT IN PLACE OF STANDARD 'M' STEEL GRATE.

PYRAMID STYLE – TRASH RACK TOP

Not To Scale

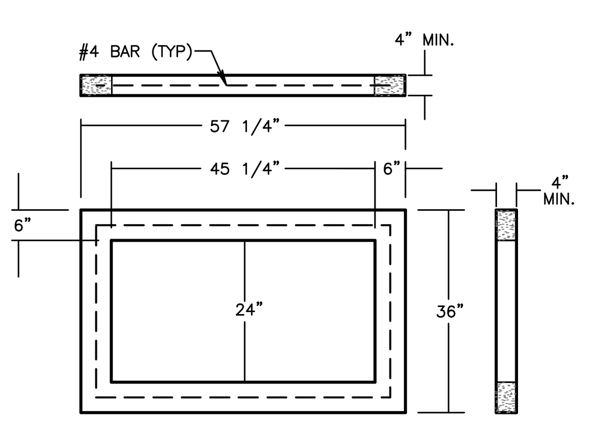

GRADE ADJUSTMENT RING (PRECAST)

Not To Scale

TYPE D–W ENDWALL
SCHEDULE OF DIMENSIONS

PIPE I.D.	L 1	L 2	W	H
15" & 18"	5'–4"	3'0"	3'–0"	3'–0"
21" & 24"	5'–10"	3'–6"	3'–6"	3'–6"
27" & 30"	6'–4"	4'–0"	4'–0"	4'–0"
36"	7'–0"	4'–8"	4'–6"	4'–8"
42"	7'–7"	5'–3"	5'–9"	5'–3"
48"	8'–2"	5'–10"	7'–0"	5'–10"
54"	8'–9"	6'–5"	8'–0"	6'–5"
60"	9'–4"	7'–0"	9'–3"	7'–0"
66"	9'–11"	7'–7"	10'–8"	7'–7"
72"	10'–6"	8'–2"	11'–6"	8'–2"

GENERAL NOTES:

1. PROVIDE MATERIALS & WORKMANSHIP IN ACCORDANCE WITH PUB. 408, SECTION 605 AND PUB. 72, RC–31 LATEST EDITIONS.
2. USE CLASS A CONCRETE OR BETTER.
3. ENDWALL MAY BE STONE FACED AS REQUIRED.
4. FOR SPECIFIC STRUCTURE ELEVATION INFORMATION, REFER TO STRUCTURE SCHEDULE ON APPROPRIATE SHEET ATTACHED WITH THIS PLAN SET.

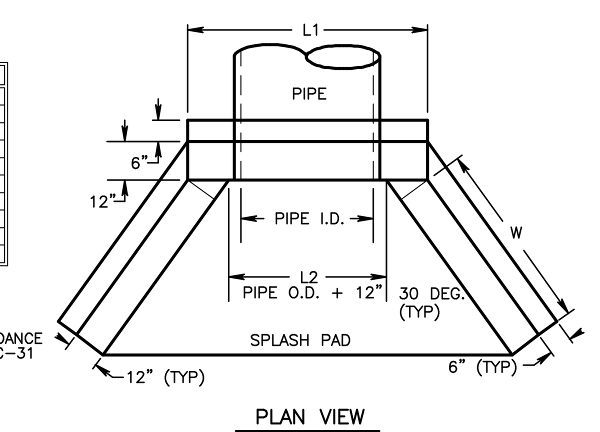

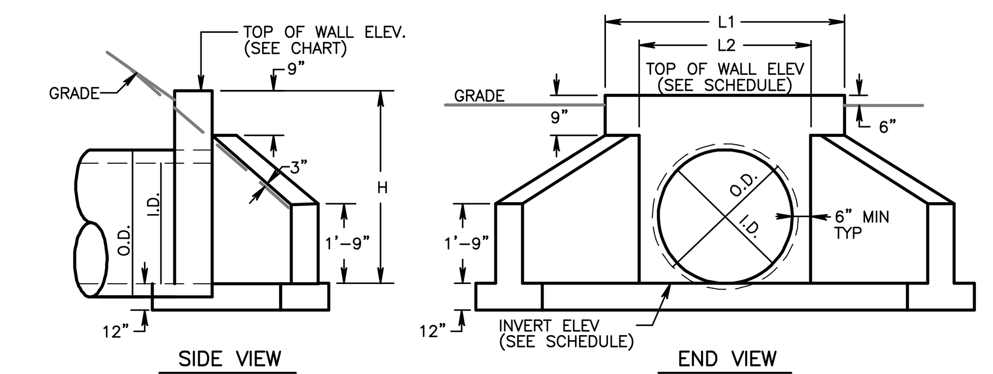

TYPE D–W ENDWALL

Not To Scale

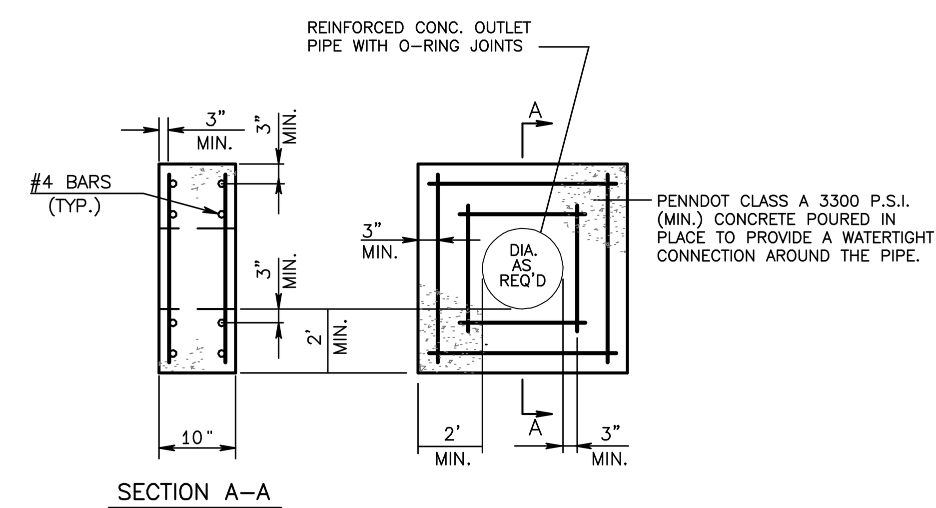

REINFORCED CONCRETE ANTI–SEEP COLLAR

Not to Scale

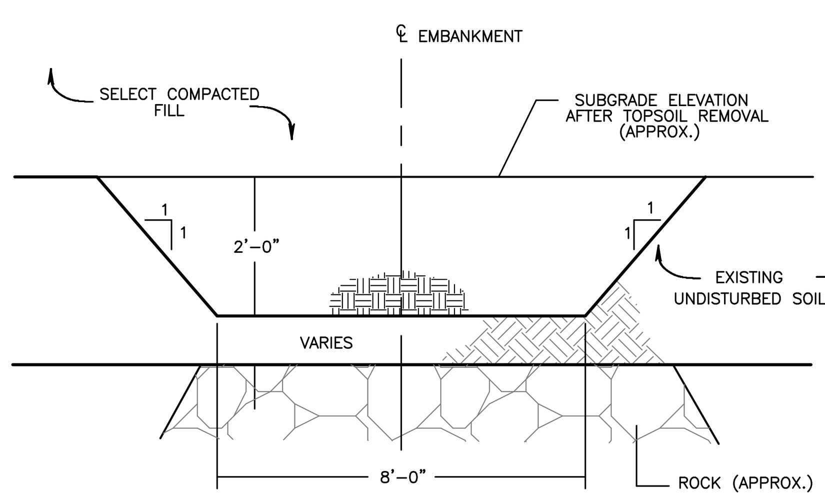

KEY TRENCH DETAIL

Not To Scale

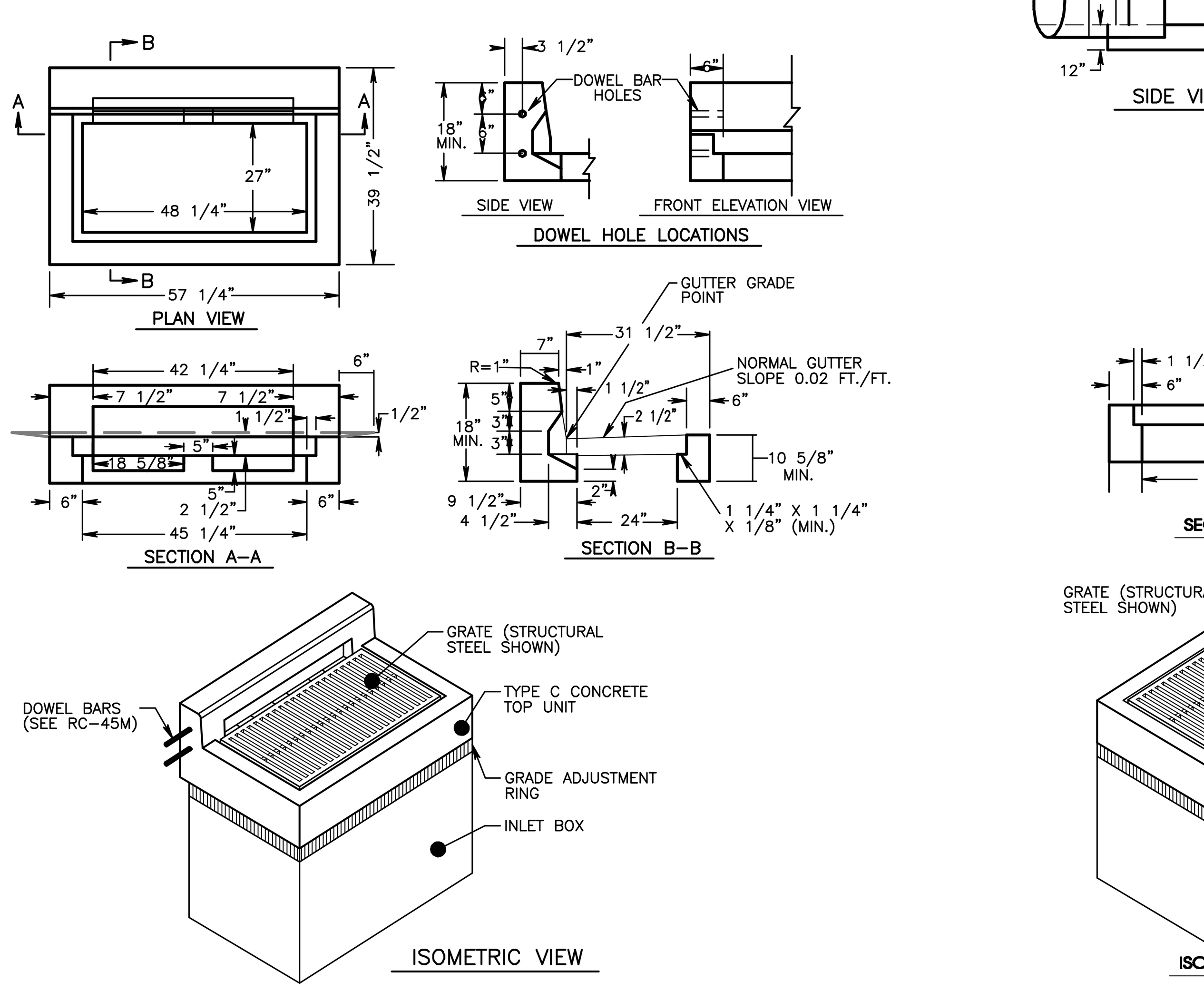

PennDOT TYPE 'C' INLET TOP DETAIL

Not To Scale

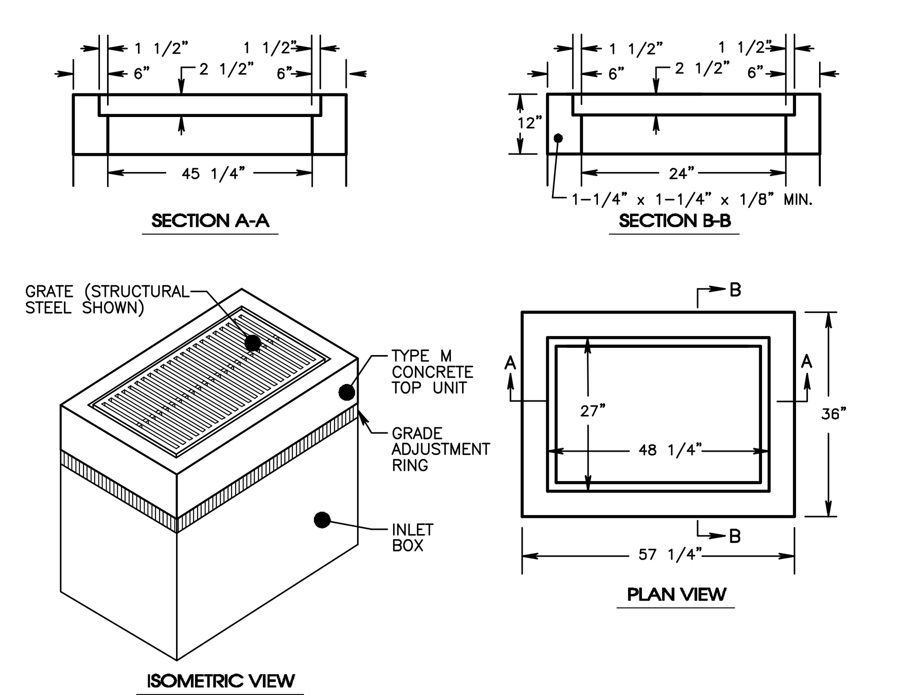

PennDOT TYPE 'M' INLET TOP DETAIL

Not To Scale

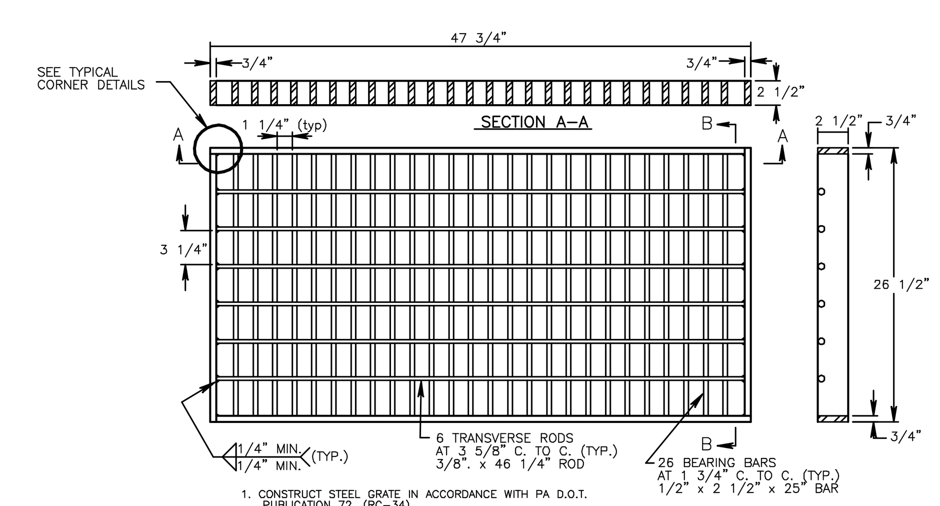

1. CONSTRUCT STEEL GRATE IN ACCORDANCE WITH PA D.O.T. PUBLICATION 72, (RC–34)
2. WELD STRUCTURAL STEEL GRATES IN ACCORDANCE WITH THE REQUIREMENTS OF PUBLICATION 408, SECTION 1105.03(R)

STRUCTURAL STEEL GRATE – BICYCLE SAFE

Not To Scale

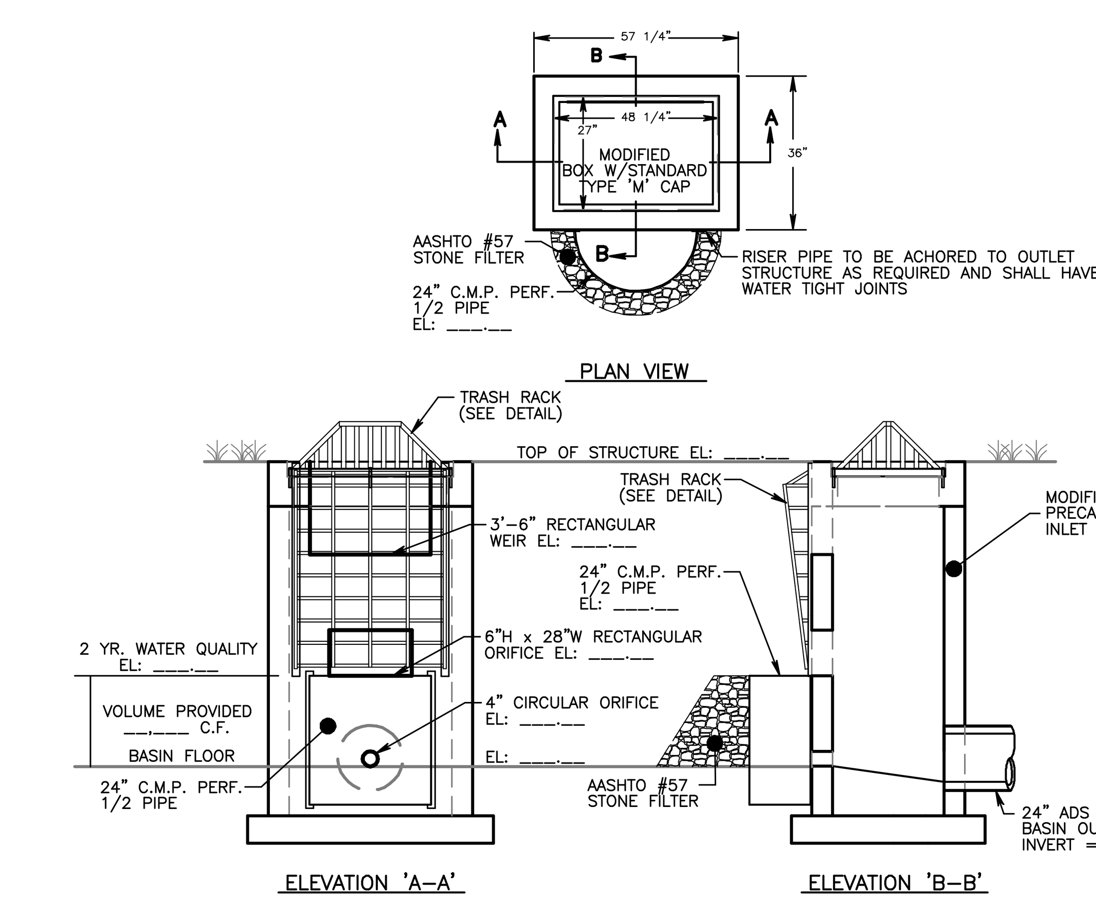

BASIN OUTLET STRUCTURE (ST–__)

Not to Scale

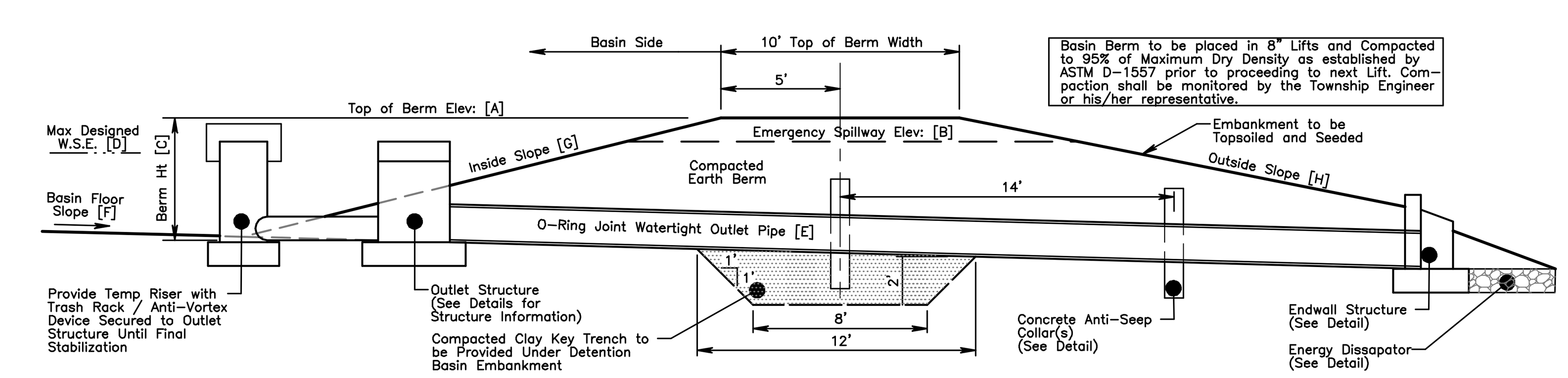

BASIN BERM DIMENSION SCHEDULE

Basin No.	Top of Berm Elev: [A]	Emergency Spillway Elev: [B]	Berm Height: [C]	Max Designed W.S.E. [D]	Outlet Pipe [E]	Basin Floor Slope [F]	Berm Slope Inside [G]	Berm Slope Outside [H]
BASIN 'A'	236.0					0.0 %	4 : 1	5 : 1
BASIN 'B'	239.5					0.0 %	4 : 1	5 : 1
BASIN 'C'	230.0					0.0 %	4 : 1	5 : 1

TYPICAL DETENTION BASIN SECTION

Not To Scale

REVISIONS

No.:	DATE:	DESCRIPTION:

ONLY PLANS INCORPORATING A RAISED PROFESSIONAL SEAL ARE CONSIDERED TO BE OFFICIAL AND RELIED UPON BY THE USER.

THIS PLAN HAS BEEN PREPARED SPECIFICALLY FOR THE APPLICANT AND PROJECT DESIGNATED HEREON. ANY MODIFICATION, REVISION, DUPLICATION OR USE WITHOUT WRITTEN CONSENT OF WOODROW & ASSOCIATES, INC. IS PROHIBITED BY LAW.

© COPYRIGHT 2015 WOODROW & ASSOCIATES, INC. – ALL RIGHTS RESERVED

Parcel Information:
TP 63–00–01108–008
Block 1 Unit 7
Deed Bk: 5658
Pg: 2573
Gross Tract:
55.5618 Acres

Record Owner:
DORIS Y &
RONALD W MARKLEY
REVOCABLE TRUST
2325 Chestnut Avenue
Norristown, PA 19403

Applicant:
MikeLen, LLC
Attn: Len DelGrippo
2965 W. Germantown Pike
Norristown, PA 19403

PRELIMINARY PLAN (Not To Be Recorded)

CONSTRUCTION DETAILS – SHEET C

MARKLEY FARM PROPERTY

WEST NORRITON TOWNSHIP – MONTGOMERY COUNTY – PENNSYLVANIA

WOODROW & ASSOCIATES, INC.
MUNICIPAL / CIVIL CONSULTING ENGINEERS
1108 North Bethlehem Pike / Suite 5 – Lower Gwynedd – PA 19002
Phone: (215) 542–5648 Fax: (215) 542–5679
Web: www.WoodrowInc.com

Layer List: Sht16_Detail–C
Plan Date: NOV 06, 2015
Job No: 11–0410 D
Design Mgr: J.H.K.
Proj. Mgr: T.P.W.
Sheet No: 16 of 34

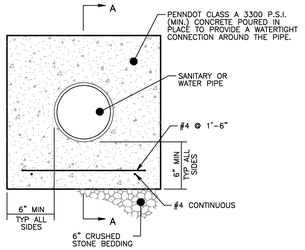

NOTE: PROVIDE REINFORCEMENT AT UTILITY CROSSINGS OR AS DIRECTED BY THE AUTHORITY'S ENGINEER

ELEVATION

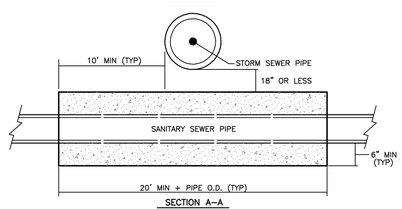

SECTION A–A

SANITARY & WATER PIPE ENCASEMENT DETAIL

Not to Scale

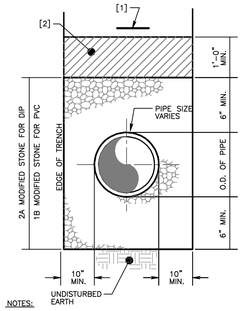

NOTES:

[1] EARLY WARNING TAPE SHALL BE TWO (2) INCH WIDE GREEN COLORED, METALLIC LINED PRINTED PLASTIC TAPE WITH THE WORDS "CAUTION BURIED SEWER LINE BELOW" STENCILED ON TAPE EVERY TWO (2) FEET. (USED IN PVC PIPE BEDDING)

[2] HAND TAMPED BACKFILL AS SPECIFIED. (2A MODIFIED STONE UNDER ALL ROADWAYS, DRIVEWAYS & PARKING LOTS)

STANDARD SANITARY SEWER PIPE BEDDING DETAIL

Not To Scale

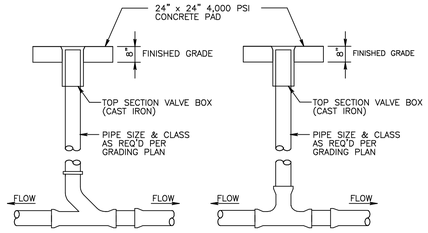

SEE SPECIFICATIONS FOR APPROVED BEDDING MATERIAL.

ONE WAY CLEAN–OUT

(Use within 5' of building only)
TWO WAY CLEAN–OUT

CLEAN–OUT DETAIL

Not To Scale

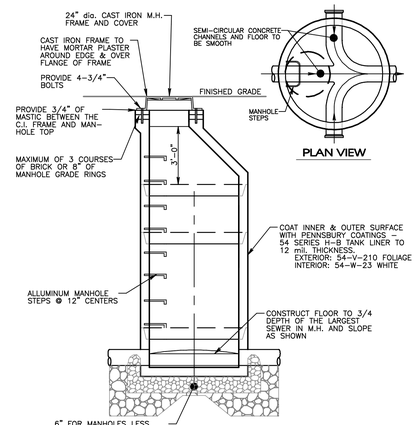

NOTE: RISERS TO BE OF MULTIPLE LENGTHS OF 1', IN ORDER TO SUIT VARIATIONS IN ELEVATION.

PRE–CAST SANITARY MANHOLE and BASE

Not To Scale

REVISIONS

No.:	DATE:	DESCRIPTION:

0'

CIVIL PLANS "CONFORMING A SINGLE PROFESSIONAL SEAL ARE CONSIDERED TO BE THE ORIGINAL PROFESSIONAL SEALED PLAN.

THIS PLAN HAS BEEN PREPARED SPECIFICALLY FOR THE APPLICANT NAMED HEREIN AND IS NOT TRANSFERABLE TO ANY OTHER PERSON OR ENTITY. REPRODUCTION OR USE WITHOUT WRITTEN CONSENT OF WOODROW & ASSOCIATES, INC. IS PROHIBITED BY LAW.

© COPYRIGHT 2015 WOODROW & ASSOCIATES, INC. – ALL RIGHTS RESERVED

Parcel Information:
TP 63-00-01109-008
Block 1 Unit 7
Deed Bk: 5658
Pg: 2573

Gross Tract:
55.5618 Acres

Record Owner:
DORIS Y & RONALD W MARKLEY REVOCABLE TRUST
1025 Colfax Avenue
Norristown, PA 19403

Applicant:
MikeLen, LLC
Attn: Len DeGrippo
2565 Bridgetown Pike
Norristown, PA 19403

PRELIMINARY PLAN (Not To Be Recorded)

CONSTRUCTION DETAILS – SHEET D

MARKLEY FARM PROPERTY

WEST NORRITON TOWNSHIP – MONTGOMERY COUNTY – PENNSYLVANIA

WOODROW & ASSOCIATES, INC.
MUNICIPAL CIVIL CONSULTING ENGINEERS
1109 North Bethlehem Pike, Suite 130, Lansdale, PA 19002
Phone: (215) 542-5648 Fax: (215) 542-5679
Web: www.woodrowinc.com

Layer List: Sht17_Detail–D

Plan Date: NOV 06, 2015

Job No: 11–0410 D

Design Mgr: J.H.K.

Proj. Mgr: T.P.W.

Sheet No: 17 of 34

Project No: 11–0410 D Project Name: MARKLEY FARM PROPERTY Print Date: Nov 2, 2015 (14:48)

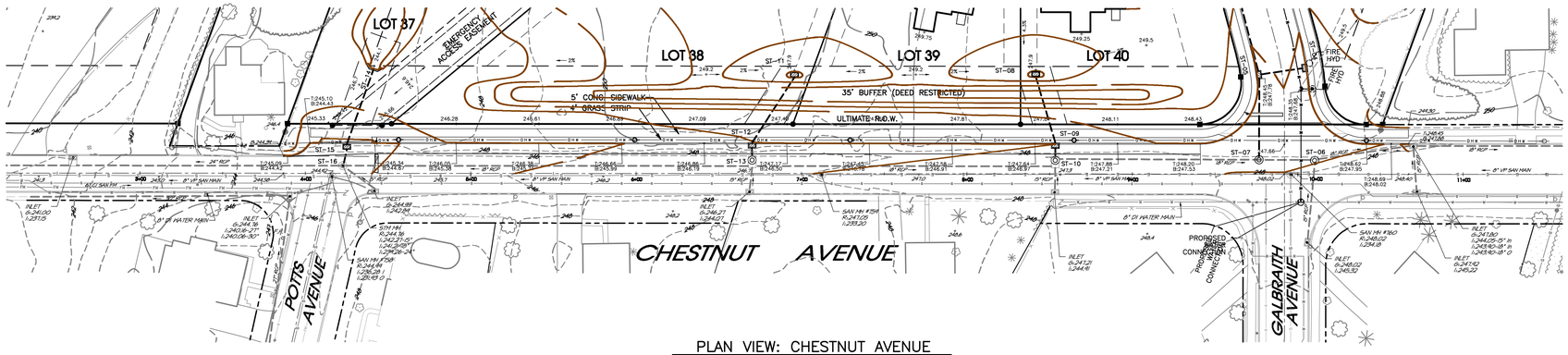

PLAN VIEW: CHESTNUT AVENUE

Scale: 1" = 40' – 0"

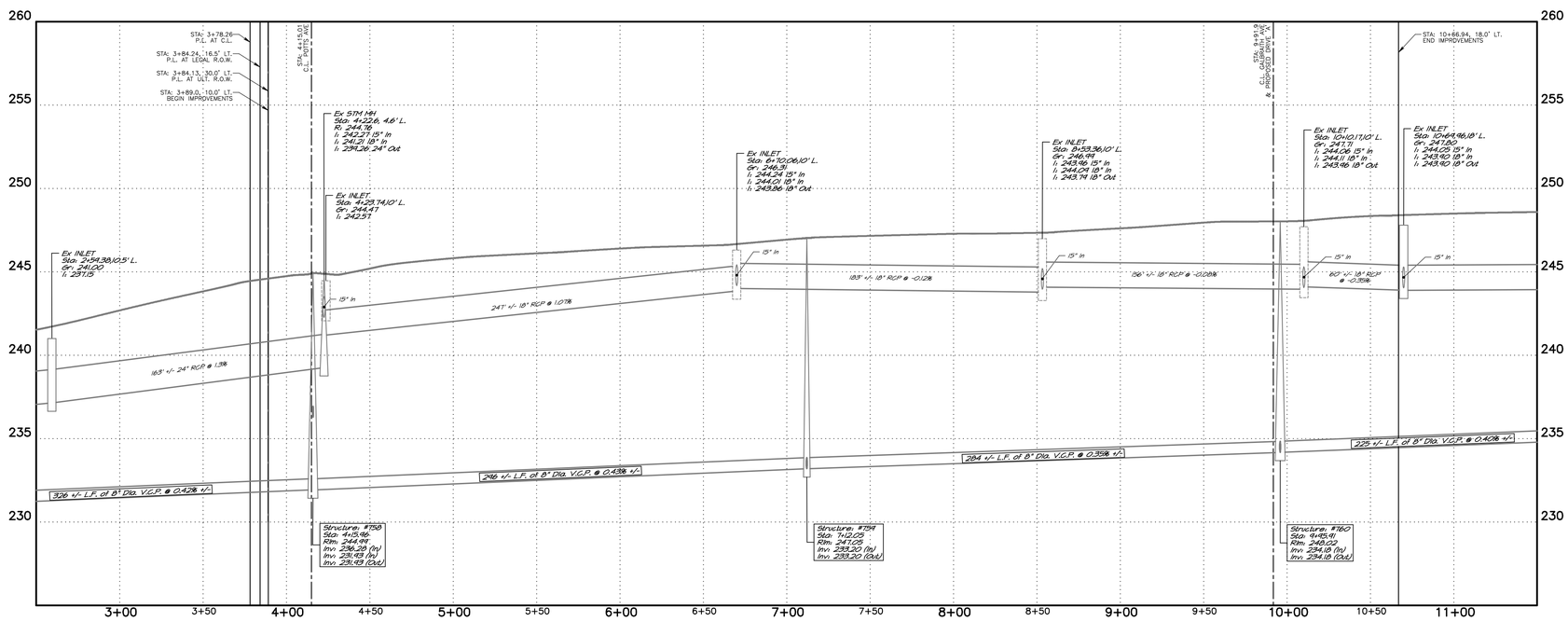

PROFILE VIEW: CHESTNUT AVENUE

Scale: 1" = 40' – 0" Horizontal
1" = 4' – 0" Vertical

REVISIONS

No.:	DATE:	DESCRIPTION:

COMMONWEALTH OF PENNSYLVANIA
REGISTERED PROFESSIONAL
TIMOTHY P. WOODROW
ENGINEER
No. 036735-E

0'

ONLY PLANS "CORRESPONDING A RAISED PROFESSIONAL SEAL ARE CONSIDERED TO BE VALID, OFFICIAL DOCUMENTS OF THE ENGINEER.

THIS PLAN HAS BEEN PREPARED SPECIFICALLY FOR THE APPLICANT NAMED HEREIN. THE USE OF THIS PLAN BY ANYONE OTHER THAN THE APPLICANT, OR FOR USE WITHOUT WRITTEN CONSENT OF WOODROW & ASSOCIATES, INC. IS PROHIBITED BY LAW.

© COPYRIGHT 2015 WOODROW & ASSOCIATES, INC. – ALL RIGHTS RESERVED

N W E S PLAN NORTH

Parcel Information:
TP 63-00-01109-008
Block 1 Unit 7
Deed Bk: 5658
Pg: 2573

Gross Tract:
55.5618 Acres

Record Owner:
DORIS Y & RONALD W MARKLEY REVOCABLE TRUST
2500 Chestnut Avenue
Norristown, PA 19403

Applicant:
MikeLen, LLC
Attn: Len DeGrippo
2316 Sterigere Street
Norristown, PA 19403

PRELIMINARY PLAN (Not To Be Recorded)

PLAN and PROFILE: CHESTNUT AVENUE

MARKLEY FARM PROPERTY

WEST NORRITON TOWNSHIP – MONTGOMERY COUNTY – PENNSYLVANIA

WOODROW & ASSOCIATES, INC.
MUNICIPAL CIVIL CONSULTING ENGINEERS
1100 North Bethlehem Pike, Suite 2, Lansdale, PA 19446
Phone: (215) 542-5648 Fax: (215) 542-5679
Web: www.woodrowinc.com

Layer List:	Sht18_Chestnut
Plan Date:	NOV 06, 2015
Job No:	11–0410 D
Design Mgr: J.H.K.	Sheet No: 18 of 34
Proj. Mgr: T.P.W.	

Project No: 11-0410 D Project Name: MARKLEY FARM PROPERTY Print Date: Nov 2, 2015 (14:40)

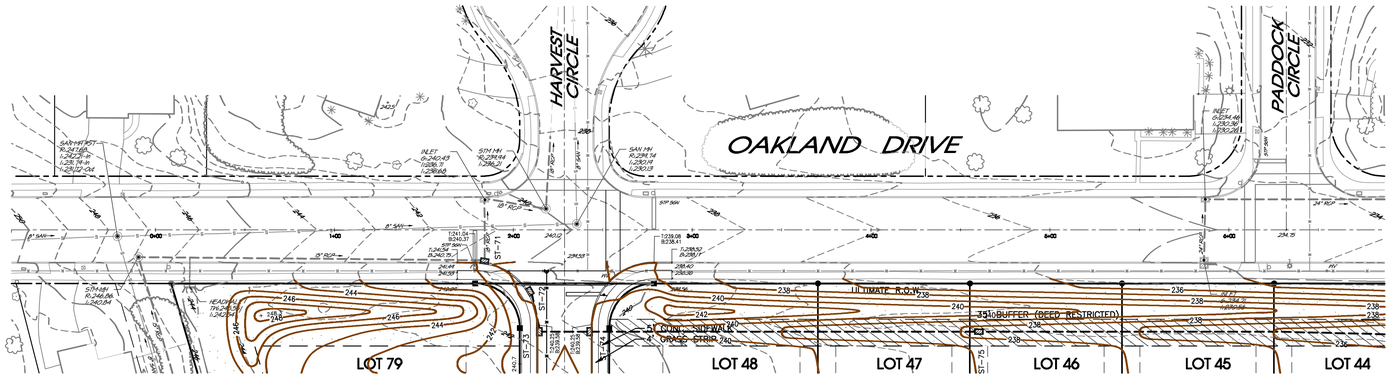

PLAN VIEW: OAKLAND DRIVE (Sta 0+00 to 6+50)

Scale: 1" = 40' – 0"

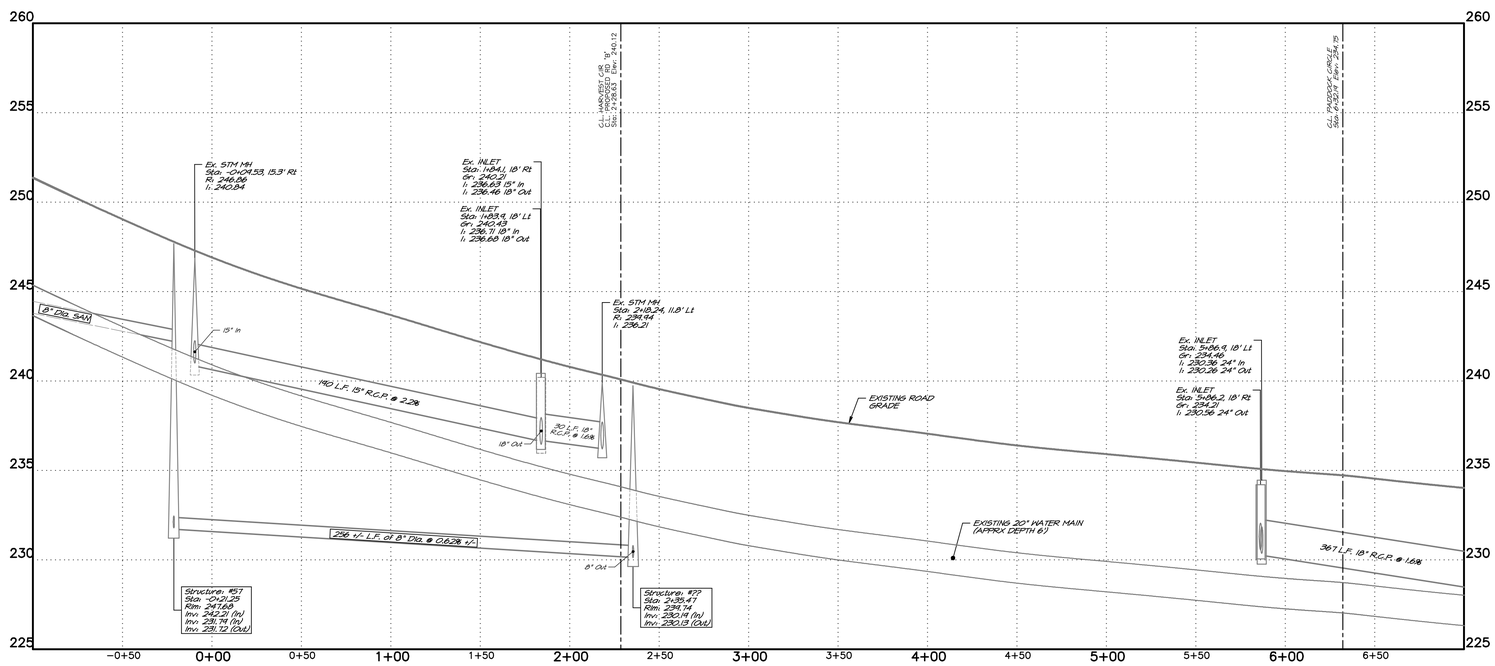

PROFILE VIEW: OAKLAND DRIVE (Sta 0+00 to 6+50)

Scale: 1" = 40' – 0" Horizontal
1" = 4' – 0" Vertical

REVISIONS

No.:	DATE:	DESCRIPTION:

COMMONWEALTH OF PENNSYLVANIA
REGISTERED PROFESSIONAL
TIMOTHY P. WOODROW
ENGINEER
No. 036735-E

SCALE IN FEET (1" = 40'-0")

40' 0' 40' 80'

CIVIL PLANS "CONTAINING A SEALED PROFESSIONAL SEAL ARE CONSIDERED TO BE THE PROFESSIONAL WORK PRODUCT."

THIS PLAN HAS BEEN PREPARED SPECIFICALLY FOR THE APPLICANT AND THE PROJECT DESCRIBED HEREIN. IT MAY NOT BE USED BY ANY OTHER PERSON OR FOR ANY OTHER PROJECT WITHOUT WOODROW & ASSOCIATES, INC.'S WRITTEN CONSENT OF WOODROW & ASSOCIATES, INC. IS PROHIBITED BY LAW.

© COPYRIGHT 2015 WOODROW & ASSOCIATES, INC. – ALL RIGHTS RESERVED

PLAN NORTH

Parcel Information:
TP 63-00-01109-008
Block: 1 Unit: 7
Deed Bk: 5658
Pg: 2573

Gross Tract:
55.5618 Acres

Record Owner:
DORIS Y & RONALD W MARKLEY REVOCABLE TRUST
2505 Dekalb Pike
Norristown, PA 19403

Applicant:
Mikelen, LLC
Attn: Len DeGrippo
2505 W. Dekalb Pike
Norristown, PA 19403

PRELIMINARY PLAN (Not To Be Recorded)

PLAN and PROFILE:
OAKLAND DRIVE (Sta 0+00 to 6+50)
MARKLEY FARM PROPERTY

WEST NORRITON TOWNSHIP – MONTGOMERY COUNTY – PENNSYLVANIA

WOODROW & ASSOCIATES, INC.
MUNICIPAL / CIVIL CONSULTING ENGINEERS
1108 North Bethlehem Pike, Suite 1-A, Lansdale, PA 19002
Phone: (215) 542-5648 Fax: (215) 542-5679
Web: www.Woodrowinc.com

Layer List: Sht19_Oakland
Plan Date: NOV 06, 2015
Job No: 11–0410 D
Design Mgr: J.H.K.
Proj. Mgr: T.P.W.
Sheet No: 19 of 34

Project No: 11–0410 D Project Name: MARKLEY FARM PROPERTY Print Date: Nov 2, 2015 (14:48)

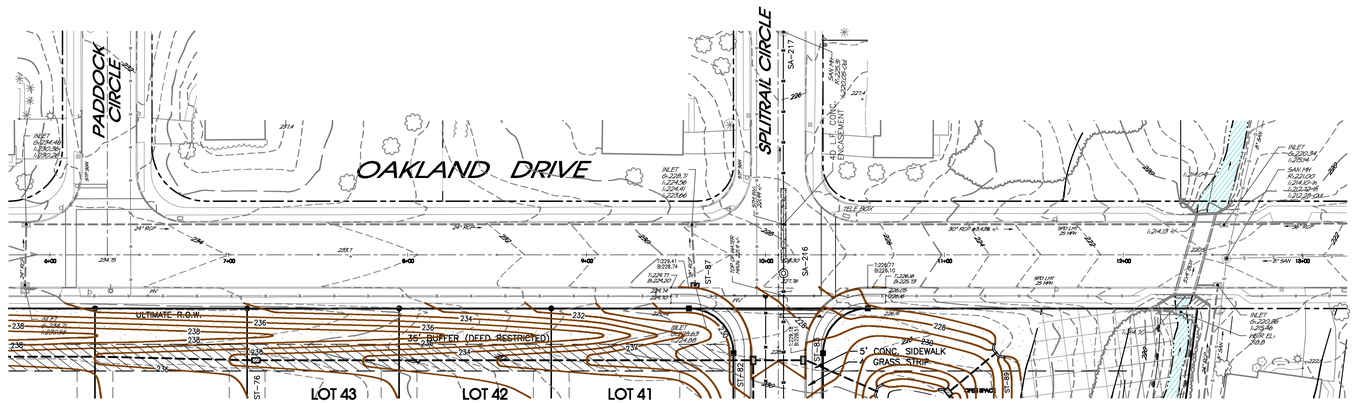

PLAN VIEW: OAKLAND DRIVE (Sta 6+50 to 13+00)

Scale: 1" = 40' – 0"

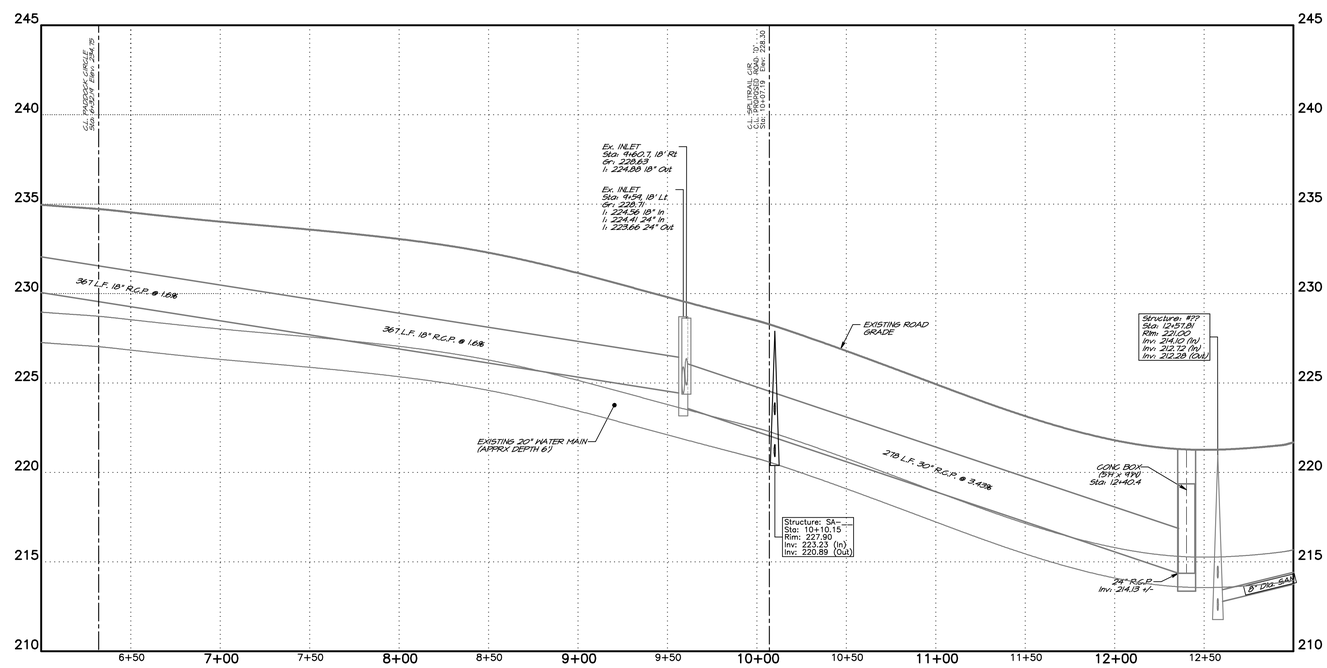

PROFILE VIEW: OAKLAND DRIVE (Sta 6+50 to 13+00)

Scale: 1" = 40' – 0" Horizontal
1" = 4' – 0" Vertical

REVISIONS

No.:	DATE:	DESCRIPTION:

COMMONWEALTH OF PENNSYLVANIA
REGISTERED PROFESSIONAL
TIMOTHY P. WOODROW
ENGINEER
No. 036735-E

0'

CAD PLANS "CONTAINING A SEALED PROFESSIONAL SEAL ARE CONSIDERED TO BE "AS BUILT" PLANS WHEN SIGNED AND DATED.

THIS PLAN HAS BEEN PREPARED SPECIFICALLY FOR THE APPLICANT NAMED HEREIN. ANY USE OF THIS PLAN BY ANY OTHER PERSON OR ENTITY, OR FOR ANY OTHER PURPOSE, OR LOCATION, WITHOUT WRITTEN CONSENT OF WOODROW & ASSOCIATES, INC. IS PROHIBITED BY LAW.

© COPYRIGHT 2015 WOODROW & ASSOCIATES, INC. – ALL RIGHTS RESERVED

N W E S PLAN NORTH

Parcel Information:
TP 63-00-01109-008
Block: 1 Unit: 7
Deed Bk: 5658
Pg: 2573

Gross Tract:
55.5618 Acres

Record Owner:
DORIS Y & RONALD W MARKLEY REVOCABLE TRUST
2905 Dekalb Pike
Norristown, PA 19403

Applicant:
Mikelen, LLC
Attn: Len DeGrippo
2905 Dekalb Pike
Norristown, PA 19403

PRELIMINARY PLAN (Not To Be Recorded)

PLAN and PROFILE: OAKLAND DRIVE (Sta 6+50 to 13+00)

MARKLEY FARM PROPERTY

WEST NORRITON TOWNSHIP – MONTGOMERY COUNTY – PENNSYLVANIA

WOODROW & ASSOCIATES, INC.
MUNICIPAL CIVIL CONSULTING ENGINEERS
1109 Berks Street, P.O. Box 1, Schwenksville, PA 19602
Phone: (215) 542-5648 Fax: (215) 542-5679
Web: www.Woodrowinc.com

Layer List: Sht20_Oakland
Plan Date: NOV 06, 2015
Job No: 11–0410 D
Design Mgr: J.H.K.
Proj. Mgr: T.P.W.
Sheet No: 20 of 34

Project No: 11–0410 D Project Name: MARKLEY FARM PROPERTY Print Date: Nov 2, 2015 (14:48)

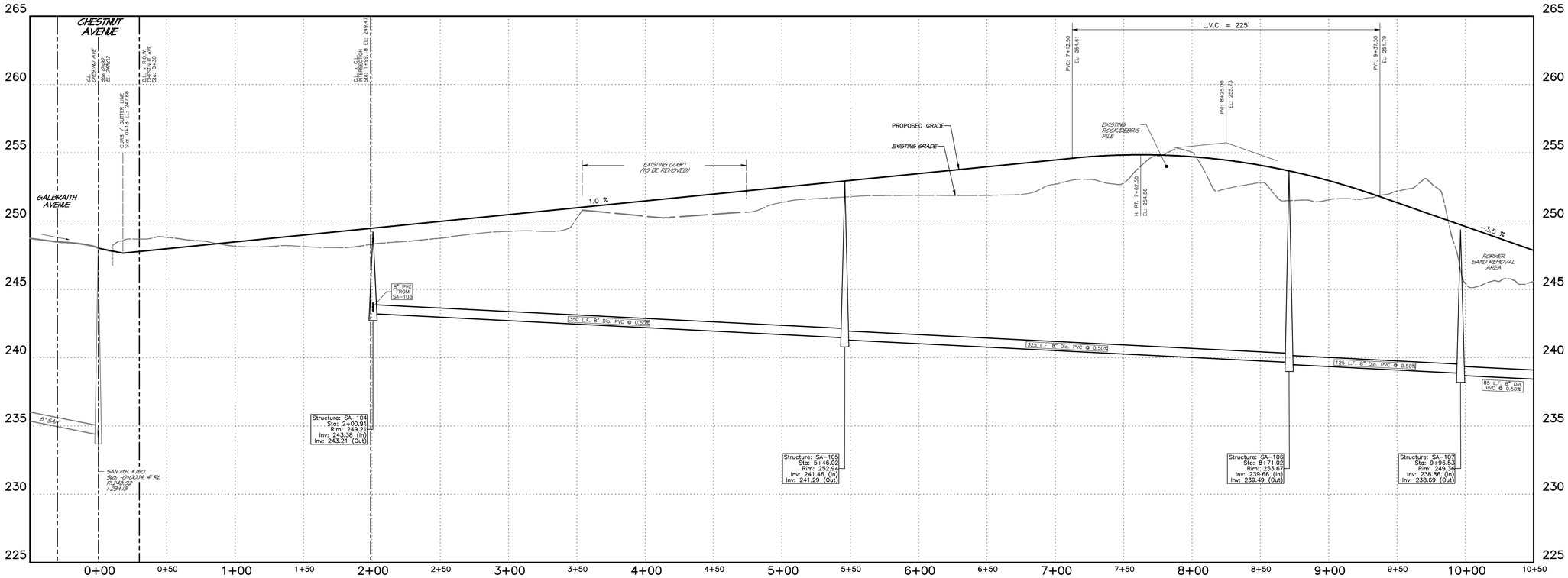

PROFILE VIEW: PROPOSED ROAD A

Scale: 1" = 40' – 0" Horizontal
1" = 4' – 0" Vertical

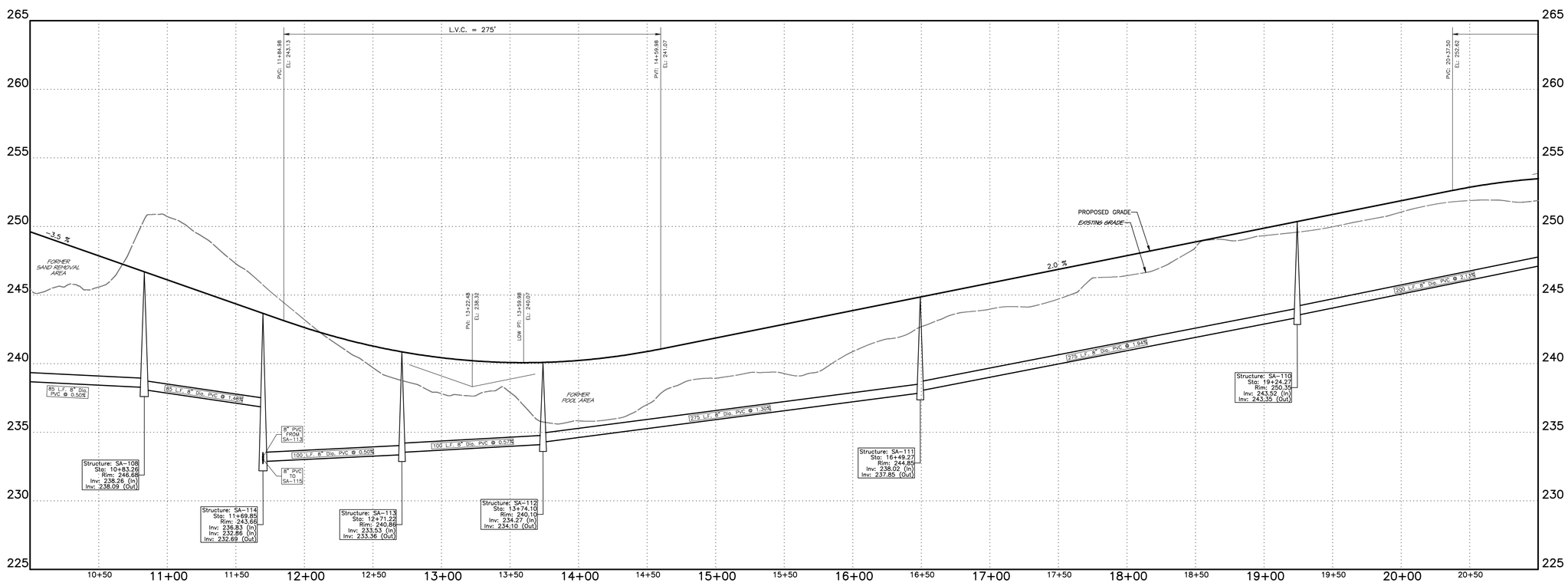

PROFILE VIEW: PROPOSED ROAD A

Scale: 1" = 40' – 0" Horizontal
1" = 4' – 0" Vertical

REVISIONS

No.:	DATE:	DESCRIPTION:

COMMONWEALTH OF PENNSYLVANIA
REGISTERED PROFESSIONAL
TIMOTHY P. WOODROW
ENGINEER
No. 036735-E

SCALE IN FEET (1" = 40'-0")
40' 0' 40' 80'

PRELIMINARY PLAN (Not To Be Recorded)

CONSULTANTS "CORRESPONDING & RESPONSIBLE PROFESSIONAL" SEALS ARE REQUIRED ON ALL PLANS, REPORTS, & DOCUMENTS.

THIS PLAN HAS BEEN PREPARED SPECIFICALLY FOR THE APPLICANT NAMED HEREIN. IT IS THE PROPERTY OF WOODROW & ASSOCIATES, INC. AND MAY NOT BE REPRODUCED, OR USED, WITHOUT WRITTEN CONSENT OF WOODROW & ASSOCIATES, INC. IS PROHIBITED BY LAW.

© COPYRIGHT 2015 WOODROW & ASSOCIATES, INC. – ALL RIGHTS RESERVED

Parcel Information:
TP 63-00-01109-008
Block 1 Unit 7
Deed Bk: 5658
Pg: 2573
Gross Tract: 55.5618 Acres

Record Owner:
DORIS Y & RONALD W MARKLEY REVOCABLE TRUST
2500 Dekalb Pike
Norristown, PA 19403

Applicant:
MikeLen, LLC
Attn: Len DeGrippo
2500 Dekalb Pike
Norristown, PA 19403

PLAN and PROFILE: PROPOSED ROAD A
MARKLEY FARM PROPERTY

WEST NORRITON TOWNSHIP – MONTGOMERY COUNTY – PENNSYLVANIA

WOODROW & ASSOCIATES, INC.
WOODROW CIVIL ENGINEERS
1109 North Bethlehem Pike, Suite 1, Lansdale, PA 19002
Phone: (215) 542-5648 Fax: (215) 542-5679
Web: www.woodrowinc.com

Layer List: Sht21_Prof-Rd-A
Plan Date: NOV 06, 2015
Job No: 11-0410 D
Design Mgr: J.H.K.
Proj. Mgr: T.P.W.
Sheet No: 21 of 34

Project No: 11-0410 D Project Name: MARKLEY FARM PROPERTY Plot Date: Nov 2, 2015 (14:48)

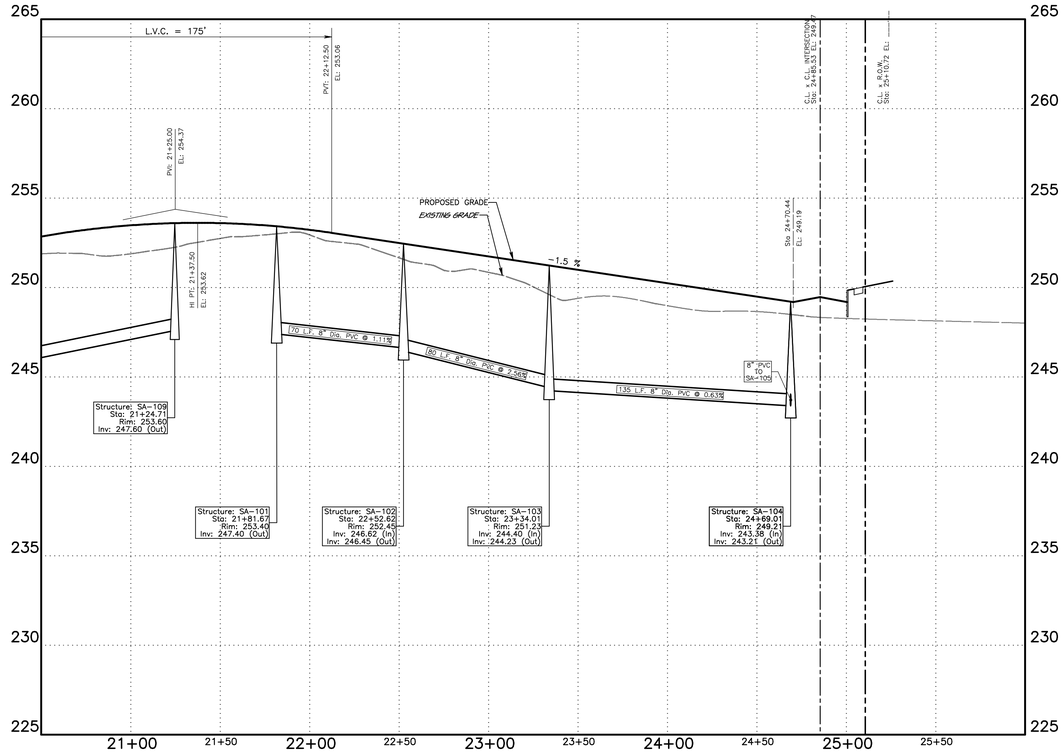

PROFILE VIEW: PROPOSED ROAD A

Scale: 1" = 40' – 0" Horizontal
1" = 4' – 0" Vertical

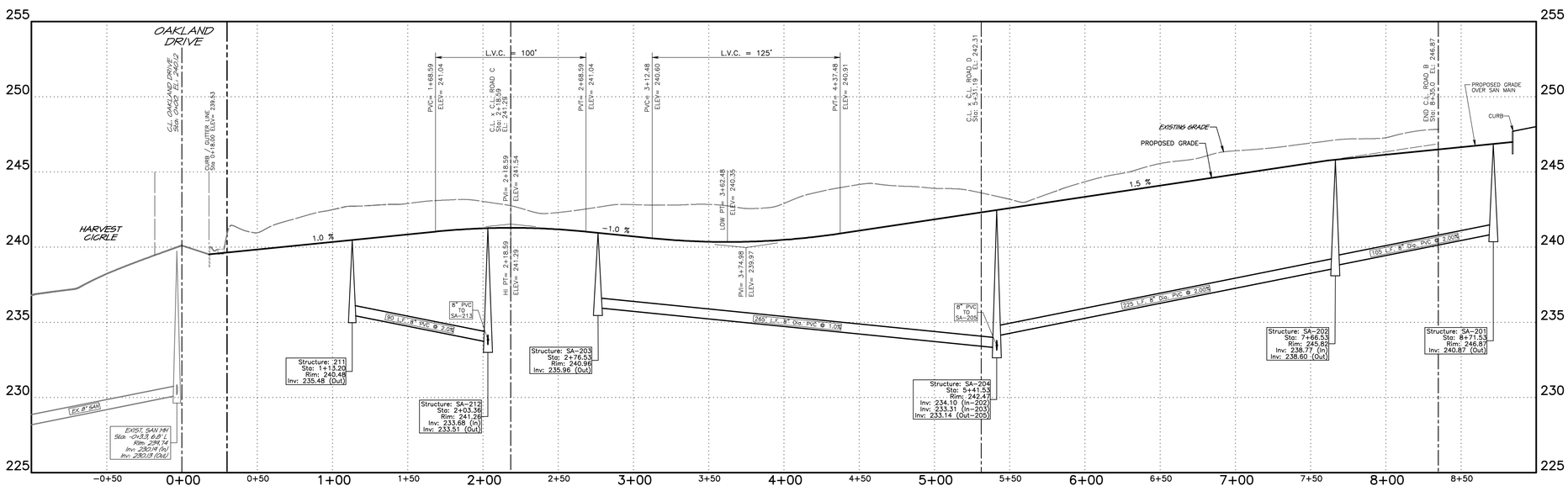

PROFILE VIEW: PROPOSED ROAD B

Scale: 1" = 40' – 0" Horizontal
1" = 4' – 0" Vertical

REVISIONS

No.:	DATE:	DESCRIPTION:

COMMONWEALTH OF PENNSYLVANIA
REGISTERED PROFESSIONAL
TIMOTHY P. WOODROW
ENGINEER
No. 036735-E

SCALE IN FEET (1" = 40'-0")
40' 0' 40' 80'

CIVIL PLANS "CONFORMING A RESIDENTIAL SUBDIVISION" SHALL BE PREPARED BY A REGISTERED PROFESSIONAL ENGINEER.

THIS PLAN HAS BEEN PREPARED SPECIFICALLY FOR THE APPLICANT AND IS NOT TRANSFERABLE TO ANY OTHER PERSON OR ENTITY. REPRODUCTION OR USE WITHOUT WRITTEN CONSENT OF WOODROW & ASSOCIATES, INC. IS PROHIBITED BY LAW.

© COPYRIGHT 2015 WOODROW & ASSOCIATES, INC. – ALL RIGHTS RESERVED

Parcel Information:
TP 63-00-01109-008
Block 1 Unit 7
Deed Bk: 5658
Pg: 2573
Gross Tract: 55.5618 Acres

Record Owner:
DORIS Y & RONALD W MARKLEY REVOCABLE TRUST
2250 Oakland Drive
Norristown, PA 19403

Applicant:
MikeLen, LLC
Attn: Len DeGrippo
2565 W. Ridge Pike
Norristown, PA 19403

PRELIMINARY PLAN (Not To Be Recorded)

PLAN and PROFILE: PROPOSED ROAD A and B

MARKLEY FARM PROPERTY

WEST NORRITON TOWNSHIP – MONTGOMERY COUNTY – PENNSYLVANIA

WOODROW & ASSOCIATES, INC.
MUNICIPAL CIVIL ENGINEERS
1108 North Bethlehem Pike, Suite 1, Lansdale, PA 19002
Phone: (215) 542-5648 Fax: (215) 542-5679
Web: www.woodrowinc.com

Layer List: Sht22_Prof-Rd-B
Plan Date: NOV 06, 2015
Job No: 11-0410 D
Design Mgr: J.H.K.
Proj. Mgr: T.P.W.
Sheet No: 22 of 34

Project No: 11-0410 D Project Name: MARKLEY FARM PROPERTY Print Date: Nov 2, 2015 (14:47)

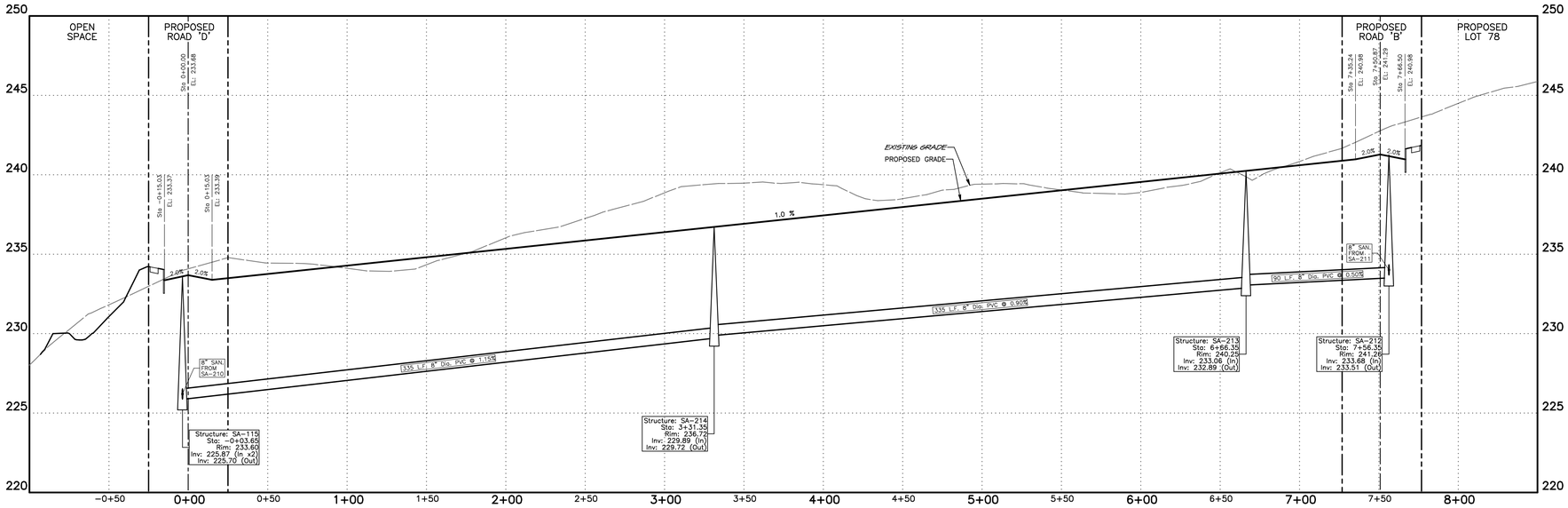

PROFILE VIEW: PROPOSED ROAD C

Scale: 1" = 40' – 0" Horizontal
1" = 4' – 0" Vertical

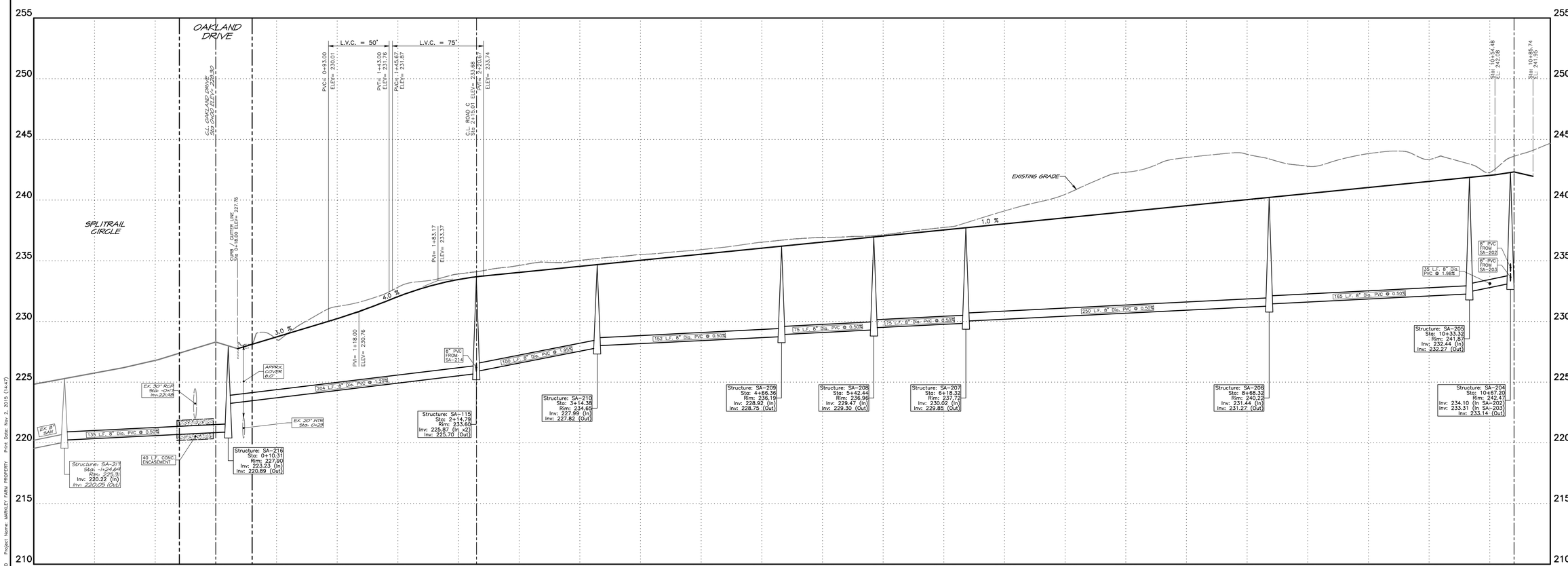

PROFILE VIEW: PROPOSED ROAD D

Scale: 1" = 40' – 0" Horizontal
1" = 4' – 0" Vertical

REVISIONS

No.:	DATE:	DESCRIPTION:

COMMONWEALTH OF PENNSYLVANIA
REGISTERED PROFESSIONAL
TIMOTHY P. WOODROW
ENGINEER
No. 036735-E

SCALE IN FEET (1" = 40'-0")
40' 0' 40' 80'

ONLY PLANS "CORRESPONDING A RAISED PROFESSIONAL SEAL ARE CONSIDERED VALID AND TRUE COPIES OF THE ORIGINAL DOCUMENT.

THIS PLAN HAS BEEN PREPARED SPECIFICALLY FOR THE APPLICANT AND FOR THE PROJECT SHOWN. ANY USE OF THIS PLAN FOR ANY OTHER PURPOSE, OR LOCATION, WITHOUT WRITTEN CONSENT OF WOODROW & ASSOCIATES, INC. IS PROHIBITED BY LAW.

© COPYRIGHT 2015 WOODROW & ASSOCIATES, INC. – ALL RIGHTS RESERVED

Parcel Information:
TP 63-00-01109-008
Block 1 Unit 7
Deed Bk: 5658
Pg: 2573

Gross Tract:
55.5618 Acres

Record Owner:
DORIS Y & RONALD W MARKLEY REVOCABLE TRUST
2300 Germantown Pike
Norristown, PA 19403

Applicant:
MikeLen, LLC
Attn: Len DeGrippo
2300 Germantown Pike
Norristown, PA 19403

PRELIMINARY PLAN (Not To Be Recorded)

PLAN and PROFILE: PROPOSED ROAD C & D

MARKLEY FARM PROPERTY

WEST NORRITON TOWNSHIP – MONTGOMERY COUNTY – PENNSYLVANIA

WOODROW & ASSOCIATES, INC.
MUNICIPAL, CIVIL, SOLUTIONS ENGINEERS
1100 North Bethlehem Pike, Suite 2, Spring House, PA 19477-0902
Phone: (215) 542-5648 Fax: (215) 542-5679
Web: www.woodrowinc.com

Layer List: Sht23_Prof-Rd-D
Plan Date: NOV 06, 2015
Job No: 11-0410 D
Design Mgr: J.H.K.
Proj. Mgr: T.P.W.
Sheet No: 23 of 34

Project No: 11-0410 D Project Name: MARKLEY FARM PROPERTY Print Date: Nov 2, 2015 (14:47)

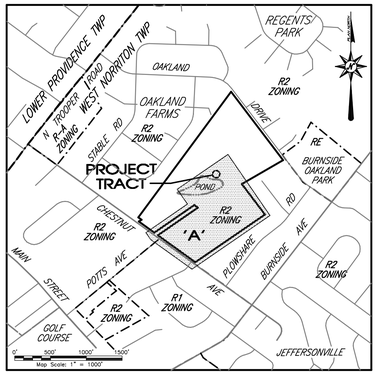

LOCATION MAP

SILT FENCE SCHEDULE

Fence No.	Location	Fence Type	Slope Length Above Fence	Slope % Above Fence	Fence Length (L.F.)

GENERAL NOTES

Base Existing Features and Survey Notes:

Refer to Sheet 6 for all Base Existing Features and Survey Notes.

Development Notes:

Refer to Sheet 7 for all base Development notes.

Landscaping Notes:

Refer to Sheet 9 for all base Landscaping notes.

Erosion Control Notes:

1. The Erosion & Sedimentation Control Plan shall minimize the extent and duration of earth disturbance to the greatest extent possible.
2. The Erosion & Sedimentation Control Plan shall maximize protection of existing drainage features and vegetation to the greatest extent possible.
3. The Erosion & Sedimentation Control Plan shall minimize soil compaction to the greatest extent possible.
4. The Erosion & Sedimentation Control Plan outlines controls to prevent and/or minimize the generation of increased stormwater runoff.

PENNSYLVANIA ONE CALL SYSTEM, INC. 1-800-242-1776 STOP-CALL BEFORE YOU DIG!

BEFORE YOU DIG ANYWHERE IN PENNSYLVANIA! CALL 1-800-242-1776

PA LAW REQUIRES THREE WORKING DAYS NOTICE TO UTILITIES BEFORE YOU EXCAVATE, DRILL, BLAST OR DEMOLISH

DEVELOPMENT A DISTURBANCE: 17.84 ACRES

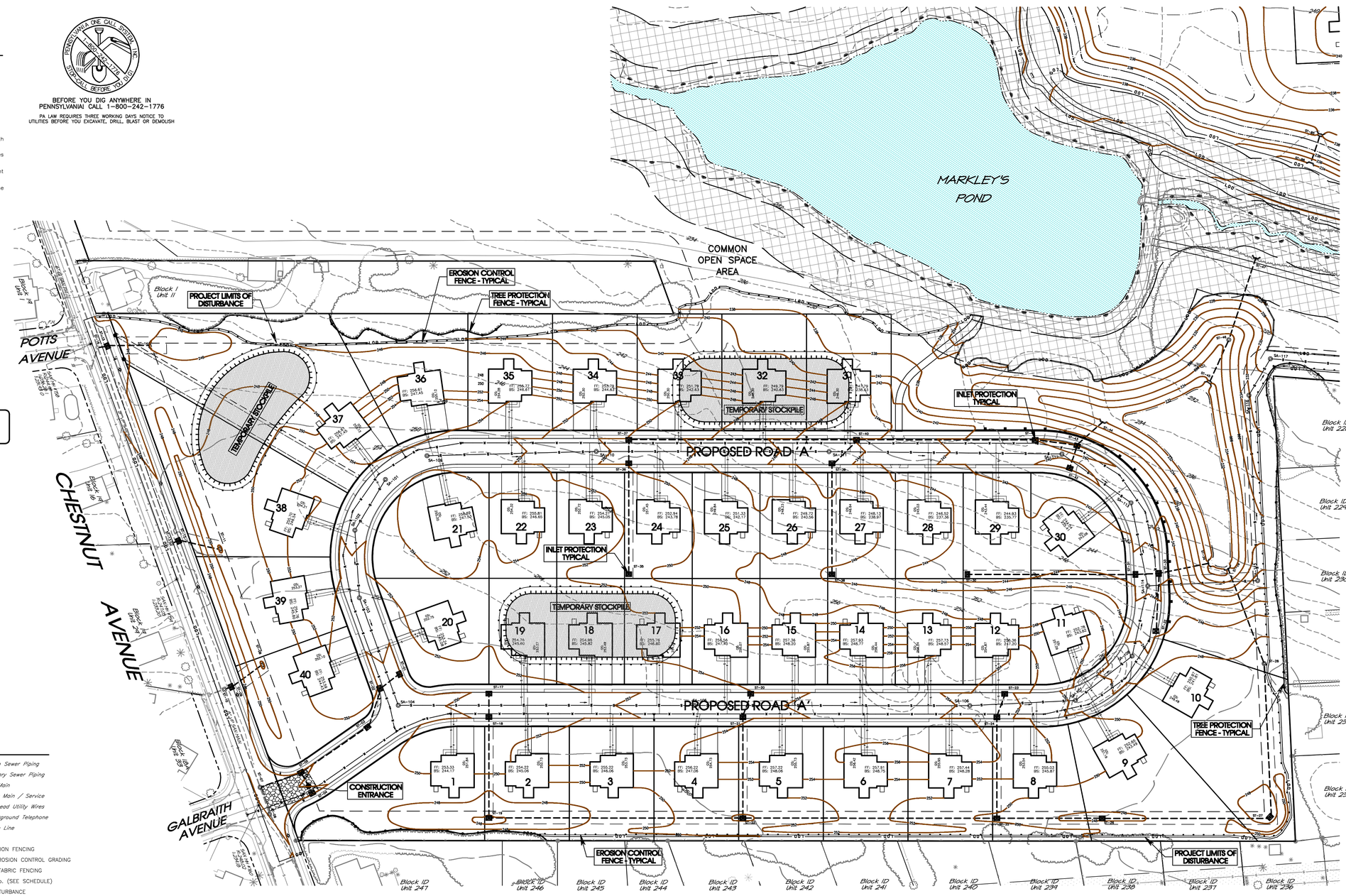

PLAN FEATURES LEGEND

- Tract Boundary Line
- Legal Right-of-Way Line
- Existing Roadway Centerline
- Mapped Wetlands Limits
- Supplemental Contour (2' Interval)
- Index Contour (10' Interval)
- Existing Soil Series Limits
- Existing Drive / Paving Limit
- Existing Vegetation Limit
- Existing Storm Sewer Piping
- Existing Sanitary Sewer Piping
- Existing Gas Main
- Existing Water Main / Service
- Existing Overhead Utility Wires
- Existing Underground Telephone
- Existing Fence Line
- TREE PROTECTION FENCING
- TEMPORARY EROSION CONTROL GRADING
- TEMP FILTER FABRIC FENCING
- SF-3 SILT FENCE No. (SEE SCHEDULE)
- LOD LIMITS OF DISTURBANCE

REVISIONS

No.:	DATE:	DESCRIPTION:

COMMONWEALTH OF PENNSYLVANIA REGISTERED PROFESSIONAL TIMOTHY P. WOODROW ENGINEER No. 036735-E

SCALE IN FEET (1" = 60'-0")

PLAN NORTH

Parcel Information: TP 63-00-01109-008 Block - 1 Unit - 7 Deed Bk: 5658 Pg: 2573 Gross Tract: 55.5618 Acres

Record Owner: DORIS Y & RONALD W MARKLEY REVOCABLE TRUST 2949 Stanbridge Street Norristown, PA 19403

Applicant: MikeLen, LLC Attn: Len DeGrippo 2949 Stanbridge Street Norristown, PA 19403

PRELIMINARY PLAN (Not To Be Recorded)

EROSION & SEDIMENTATION CONTROL PLAN – DEVELOPMENT AREA A

MARKLEY FARM PROPERTY

WEST NORRITON TOWNSHIP – MONTGOMERY COUNTY – PENNSYLVANIA

WOODROW & ASSOCIATES, INC.
MUNICIPAL ENGINEERS & CONSULTING ENGINEERS
1109 Berks Street, P.O. Box 1, Schwenksville, PA 19602
Phone: (215) 542-5648 Fax: (215) 542-5679
Web: www.woodrowinc.com

THIS PLAN HAS BEEN PREPARED SPECIFICALLY FOR THE APPLICANT NAMED HEREIN AND IS THE PROPERTY OF WOODROW & ASSOCIATES, INC. AND MAY NOT BE USED OR REPRODUCED, IN WHOLE OR IN PART, WITHOUT WRITTEN CONSENT OF WOODROW & ASSOCIATES, INC. IS PROHIBITED BY LAW.

© COPYRIGHT 2015 WOODROW & ASSOCIATES, INC. – ALL RIGHTS RESERVED

Layer List: Sht27_E&S-A

Plan Date: NOV 06, 2015

Job No: 11-0410 D

Design Mgr: J.H.K.

Proj. Mgr: T.P.W.

Sheet No: 27 of 34

Project No: 11-0410 D Project Name: MARKLEY FARM PROPERTY Print Date: Nov 2, 2015 (14:46)

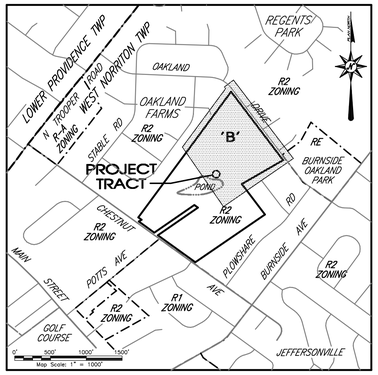

LOCATION MAP

SILT FENCE SCHEDULE

Fence No.	Location	Fence Type	Slope Length Above Fence	Slope % Above Fence	Fence Length (L.F.)

GENERAL NOTES

Base Existing Features and Survey Notes:

Refer to Sheet 6 for all Base Existing Features and Survey Notes.

Development Notes:

Refer to Sheet 7 for all base Development notes.

Landscaping Notes:

Refer to Sheet 9 for all base Landscaping notes.

Erosion Control Notes:

1. The Erosion & Sedimentation Control Plan shall minimize the extent and duration of earth disturbance to the greatest extent possible.
2. The Erosion & Sedimentation Control Plan shall maximize protection of existing drainage features and vegetation to the greatest extent possible.
3. The Erosion & Sedimentation Control Plan shall minimize soil compaction to the greatest extent possible.
4. The Erosion & Sedimentation Control Plan outlines controls to prevent and/or minimize the generation of increased stormwater runoff.

PENNSYLVANIA ONE CALL SYSTEM, INC.
1-800-242-1776
STOP-CALL BEFORE YOU DIG!

BEFORE YOU DIG ANYWHERE IN PENNSYLVANIA! CALL 1-800-242-1776

PA LAW REQUIRES THREE WORKING DAYS NOTICE TO UTILITIES BEFORE YOU EXCAVATE, DRILL, BLAST OR DEMOLISH

DEVELOPMENT B DISTURBANCE:
17.91 ACRES

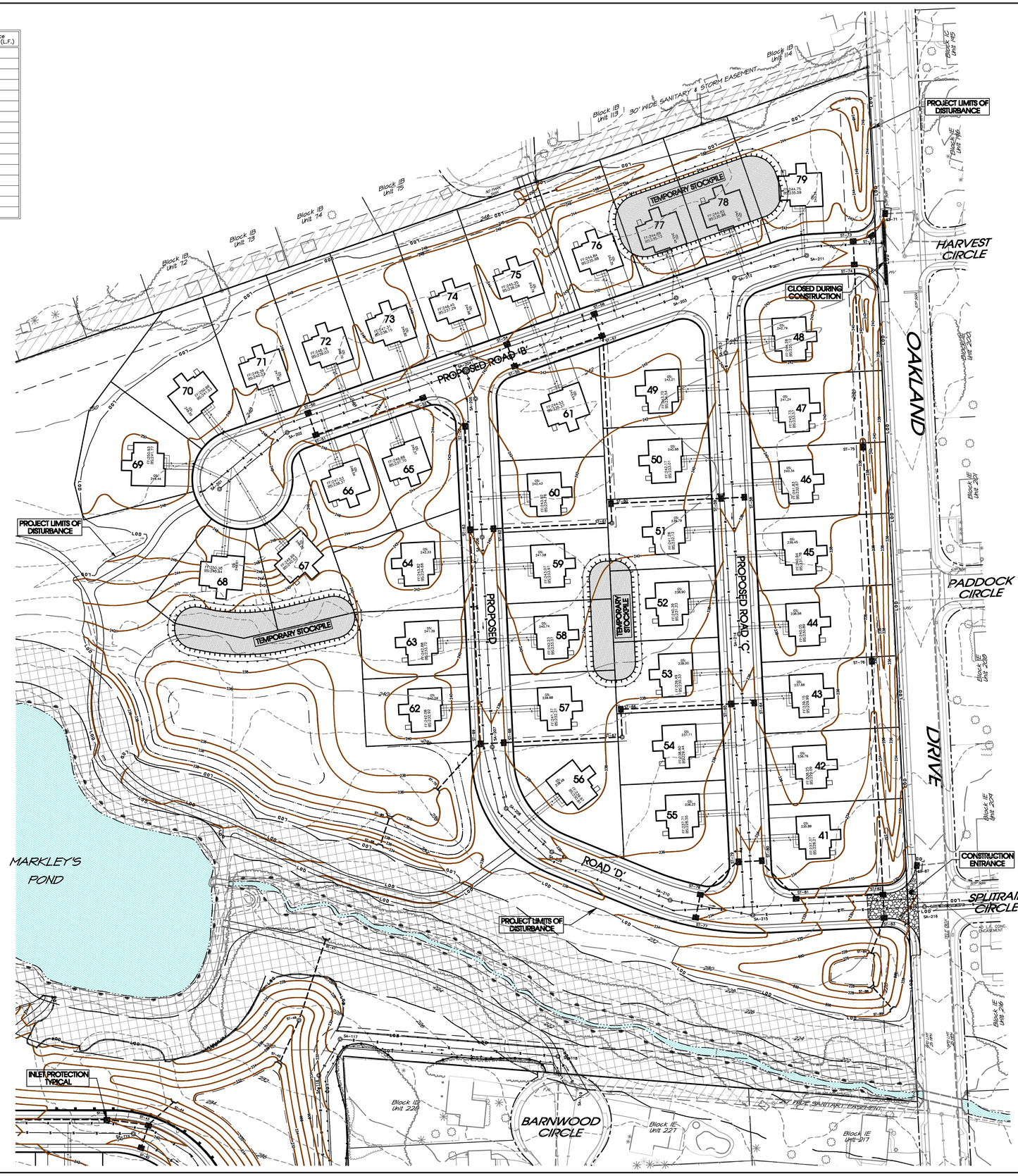

PLAN FEATURES LEGEND

- Tract Boundary Line
- Legal Right-of-Way Line
- Existing Roadway Centerline
- Mapped Wetlands Limits
- Supplemental Contour (2' Interval)
- Index Contour (10' Interval)
- Existing Soil Series Limits
- Existing Drive / Paving Limit
- Existing Vegetation Limit
- Existing Storm Sewer Piping
- Existing Sanitary Sewer Piping
- Existing Gas Main
- Existing Water Main / Service
- Existing Overhead Utility Wires
- Existing Underground Telephone
- Existing Fence Line
- MAXIMUM DRAINAGE AREA TO SEDIMENT BASIN
- TREE PROTECTION FENCING
- TEMPORARY EROSION CONTROL GRADING
- TEMP FILTER FABRIC FENCING
- SF-3 SILT FENCE No. (SEE SCHEDULE)
- LOD LIMITS OF DISTURBANCE
- NPDES BOUNDARY LIMIT

No.:	DATE:	DESCRIPTION:

REVISIONS

COMMONWEALTH OF PENNSYLVANIA
REGISTERED PROFESSIONAL
TIMOTHY P. WOODROW
ENGINEER
No. 036735-E

SCALE IN FEET (1" = 60'-0")

PLAN NORTH

Parcel Information:
TP 63-00-01109-008
Block - Unit 7
Deed Bk: 5658
Pg: 2573
Gross Tract: 55.5618 Acres

Record Owner:
DORIS Y & RONALD W MARKLEY REVOCABLE TRUST
2500 Jacksonville Road
Norristown, PA 19403

Applicant:
MikeLen, LLC
Attn: Len DeGrippo
2500 Jacksonville Road
Norristown, PA 19403

PRELIMINARY PLAN (Not To Be Recorded)

EROSION & SEDIMENTATION CONTROL PLAN – DEVELOPMENT AREA B

MARKLEY FARM PROPERTY

WEST NORRITON TOWNSHIP – MONTGOMERY COUNTY – PENNSYLVANIA

WOODROW & ASSOCIATES, INC.
MUNICIPAL CIVIL & SANITARY ENGINEERS
1109 North Bethlehem Pike, Suite 3, Lansdale, PA 19446-2902
Phone: (215) 542-5648 Fax: (215) 542-5679
Web: www.woodrowinc.com

THIS PLAN HAS BEEN PREPARED SPECIFICALLY FOR THE APPLICANT NAMED HEREIN AND IS THE PROPERTY OF WOODROW & ASSOCIATES, INC. IT MAY NOT BE USED OR REPRODUCED, IN WHOLE OR IN PART, WITHOUT WRITTEN CONSENT OF WOODROW & ASSOCIATES, INC. IS PROHIBITED BY LAW.

© COPYRIGHT 2015 WOODROW & ASSOCIATES, INC. – ALL RIGHTS RESERVED

Layer List: Sht28_E&S-B
Plan Date: NOV 06, 2015
Job No: 11-0410 D
Design Mgr: J.H.K.
Proj. Mgr: T.P.W.
Sheet No: 28 of 34

Project No: 11-0410 D Project Name: MARKLEY FARM PROPERTY Print Date: Nov 2, 2015 (14:45)

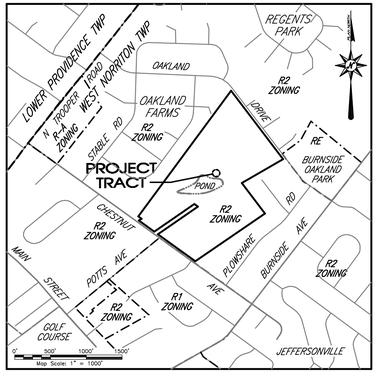

LOCATION MAP

SILT FENCE SCHEDULE

Fence No.	Location	Fence Type	Slope Length Above Fence	Slope % Above Fence	Fence Length (L.F.)

GENERAL NOTES

Base Existing Features and Survey Notes:

Refer to Sheet 6 for all Base Existing Features and Survey Notes.

Development Notes:

Refer to Sheet 7 for all base Development notes.

Landscaping Notes:

Refer to Sheet 9 for all base Landscaping notes.

Erosion Control Notes:

1. The Erosion & Sedimentation Control Plan shall minimize the extent and duration of earth disturbance to the greatest extent possible.
2. The Erosion & Sedimentation Control Plan shall maximize protection of existing drainage features and vegetation to the greatest extent possible.
3. The Erosion & Sedimentation Control Plan shall minimize soil compaction to the greatest extent possible.
4. The Erosion & Sedimentation Control Plan outlines controls to prevent and/or minimize the generation of increased stormwater runoff.

PENNSYLVANIA ONE CALL SYSTEM, INC.
1-800-242-1776
STOP-CALL BEFORE YOU DIG!

BEFORE YOU DIG ANYWHERE IN PENNSYLVANIA! CALL 1-800-242-1776

PA LAW REQUIRES THREE WORKING DAYS NOTICE TO UTILITIES BEFORE YOU EXCAVATE, DRILL, BLAST OR DEMOLISH

DEVELOPMENT B DISTURBANCE:
__.__ ACRES

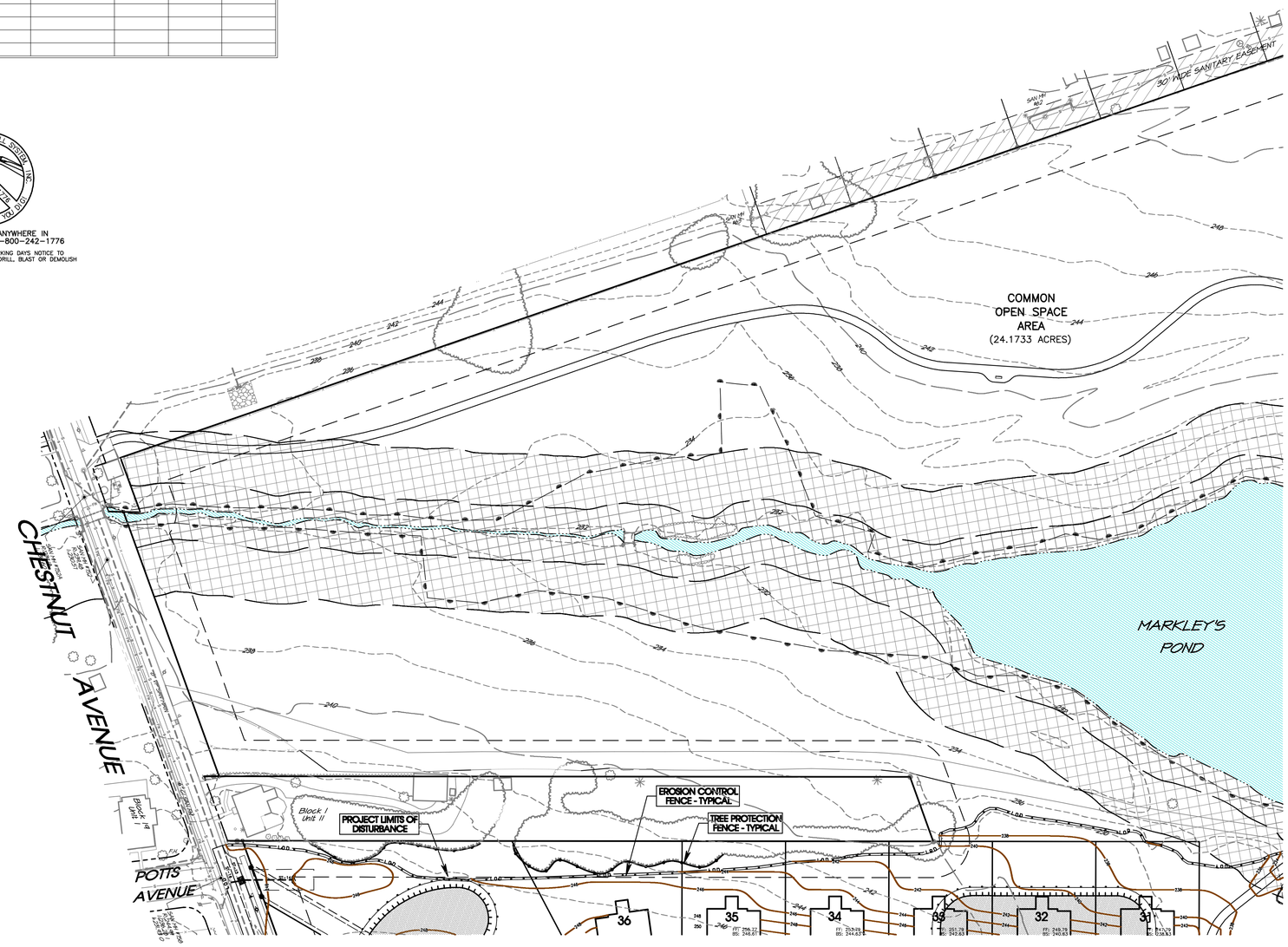

PLAN FEATURES LEGEND

- Tract Boundary Line
- Legal Right-of-Way Line
- Existing Roadway Centerline
- Mapped Wetlands Limits
- Supplemental Contour (2' Interval)
- Index Contour (10' Interval)
- Existing Soil Series Limits
- Existing Drive / Paving Limit
- Existing Vegetation Limit
- Existing Storm Sewer Piping
- Existing Sanitary Sewer Piping
- Existing Gas Main
- Existing Water Main / Service
- Existing Overhead Utility Wires
- Existing Underground Telephone
- Existing Fence Line
- MAXIMUM DRAINAGE AREA TO SEDIMENT BASIN
- TREE PROTECTION FENCING
- TEMPORARY EROSION CONTROL GRADING
- TEMP FILTER FABRIC FENCING
- SF-3 SILT FENCE No. (SEE SCHEDULE)
- LOD LIMITS OF DISTURBANCE
- NPDES BOUNDARY LIMIT

REVISIONS

No.:	DATE:	DESCRIPTION:

COMMONWEALTH OF PENNSYLVANIA
REGISTERED PROFESSIONAL
TIMOTHY P. WOODROW
ENGINEER
No. 036735-E

SCALE IN FEET (1" = 60'-0")

THIS PLAN HAS BEEN PREPARED SPECIFICALLY FOR THE APPLICANT NAMED HEREIN AND IS THE PROPERTY OF WOODROW & ASSOCIATES, INC. IT MAY NOT BE USED OR REPRODUCED WITHOUT WRITTEN CONSENT OF WOODROW & ASSOCIATES, INC. IS PROHIBITED BY LAW.

© COPYRIGHT 2015 WOODROW & ASSOCIATES, INC. - ALL RIGHTS RESERVED

PLAN NORTH

Parcel Information:
TP 63-00-01109-008
Block 1 Unit 7
Deed Bk: 5658
Pg: 2573
Gross Tract: 55.5618 Acres

Record Owner:
DORIS Y & RONALD W MARKLEY REVOCABLE TRUST
2250 Potts Ave.
Norristown, PA 19403

Applicant:
MikeLen, LLC
Attn: Len DeGrippo
2340 W. Marshall Street
Norristown, PA 19403

PRELIMINARY PLAN (Not To Be Recorded)

EROSION & SEDIMENTATION CONTROL PLAN – DEVELOPMENT AREA C
MARKLEY FARM PROPERTY

WEST NORRITON TOWNSHIP – MONTGOMERY COUNTY – PENNSYLVANIA

WOODROW & ASSOCIATES, INC.
MUNICIPAL CIVIL ENGINEERS
1108 North Bethlehem Pike, Suite 1, Lansdale, PA 19446
Phone: (215) 542-5648 Fax: (215) 542-5679
Web: www.Woodrowinc.com

Layer List: Sht29_E&S-C
Plan Date: NOV 06, 2015
Job No: 11-0410 D
Design Mgr: J.H.K.
Proj. Mgr: T.P.W.
Sheet No: 29 of 34

Project No: 11-0410 D Project Name: MARKLEY FARM PROPERTY Print Date: Nov 2, 2015 (14:45)

STANDARD EROSION CONTROL PLAN NOTES

1. All earth disturbances, including clearing and grubbing as well as cuts and fills shall be done in accordance with the approved E&S plan. A copy of the approved drawings (stamped, signed and dated by the reviewing agency) must be available at the project site at all times. The reviewing agency shall be notified of any changes to the approved plan prior to implementation of those changes. The reviewing agency may require a written submittal of those changes for review and approval at its discretion.
2. At least 7 days prior to starting any earth disturbance activities, including clearing and grubbing, the owner and/or operator shall invite all contractors, the landowner, appropriate municipal officials, the E&S plan preparer, the PCSM plan preparer, the licensed professional responsible for oversight of critical stages of implementation of the PCSM plan, and a representative from the local conservation district to an on-site preconstruction meeting.
3. At least 3 days prior to starting any earth disturbance activities, or expanding into an area previously unmarked, the Pennsylvania One Call System Inc. shall be notified at 1-800-242-1776 or 811 for the location of existing underground utilities.
4. All earth disturbance activities shall proceed in accordance with the sequence provided on the plan drawings. Deviation from that sequence must be approved in writing from the local conservation district or by the Department prior to implementation.
5. Areas to be filled are to be cleared, grubbed, and stripped of topsoil to remove trees, vegetation, roots and other objectionable material.
6. Clearing, grubbing, and topsoil stripping shall be limited to those areas described in each stage of the construction sequence. General site clearing, grubbing and topsoil stripping may not commence in any stage or phase of the project until the E&S BMPs specified by the BMP sequence for that stage or phase have been installed and are functioning as described in the E&S plan.
7. At no time shall construction vehicles be allowed to enter areas outside the limit of disturbance boundaries shown on the plan maps. These areas must be clearly marked and fenced off before clearing and grubbing operations begin.
8. Topsoil required for the establishment of vegetation shall be stockpiled at the location(s) shown on the plan map(s) in the amount necessary to complete the finish grading of all exposed areas that are to be stabilized by vegetation. Each stockpile shall be protected in the manner shown on the plan drawings. Stockpile heights shall not exceed 35 feet. Stockpile slopes shall be 2H:1V or flatter.
9. Immediately upon discovering unforeseen circumstances posing the potential for accelerated erosion and/or sediment pollution, the operator shall implement appropriate best management practices to minimize the potential for erosion and sediment pollution and notify the local conservation district and/or the regional office of the Department.
10. All building materials and wastes shall be removed from the site and recycled or disposed of in accordance with the Department's Solid Waste Management Regulations at 25Pa. Code 260.1 et seq., 271.1, and 287.1 et. seq. No building materials or wastes or unused building materials shall be burned, buried, dumped, or discharged at the site.
11. All off-site waste and borrow areas must have an E&S plan approved by the local conservation district or the Department fully implemented prior to being activated.
12. The contractor is responsible for ensuring that any material brought on site is clean fill. Form FP-001 must be retained by the property owner for any fill material affected by a spill or release of a regulated substance but qualifying as clean fill due to analytical testing.
13. All pumping of water from any work area shall be done according to the procedure described in this plan, over undisturbed vegetated areas.
14. Until the site is stabilized, all erosion and sediment BMPs shall be maintained properly. Maintenance shall include inspections of all erosion and sediment BMPs after each runoff event on a weekly basis. All preventative and remedial maintenance work, including clean out, repair, replacement, regrading, reseeding, remulching and renetting must be performed immediately. If the E&S BMPs fail to perform as expected, replacement BMPs, or modifications of those installed will be required.
15. A log showing dates that E&S BMPs were inspected as well as any deficiencies found and the date they were corrected shall be maintained on the site and be made available to regulatory agency officials at the time of inspection.
16. Sediment tracked onto any public roadway or sidewalk shall be returned to the construction site by the end of each work day and disposed in the manner described in this plan. In no case shall the sediment be washed, shoveled, or swept into any roadside ditch, storm sewer, or surface water.
17. All sediment removed from BMPs shall be disposed of in the manner described on the plan drawings.
18. Areas which are to be topsoiled shall be scarified to a minimum depth of 3 to 5 inches – 6 to 12 inches on compacted soils – prior to placement of topsoil. Areas to be vegetated shall have a minimum 4 inches of topsoil in place prior to seeding and mulching. Fill outslopes shall have a minimum of 2 inches of topsoil
19. All fills shall be compacted as required to reduce erosion, slippage, settlement, subsidence or other related problems. Fill intended to support buildings, structures and conduits, etc. shall be compacted in accordance with local requirements or codes.
20. All earthen fills shall be placed in compacted layers not to exceed 9 inches in thickness.
21. Fill materials shall be free of frozen particles, brush, roots, sod, or other foreign or objectionable materials that would interfere with or prevent construction of satisfactory fills.
22. Frozen materials or soft, mucky, or highly compressible materials shall not be incorporated into fills.
23. Fill shall not be placed on saturated or frozen surfaces.
24. Seeps or springs encountered during construction shall be handled in accordance with the standard and specification for subsurface drain or other approved method.
25. All graded areas shall be permanently stabilized immediately upon reaching finished grade. Cut slopes in competent bedrock and rock fills need not be vegetated. Seeded areas within 50 feet of a surface water, or as otherwise shown on the plan drawings, shall be blanketed according to the standards of this plan.
26. Immediately after earth disturbance activities cease in any area or subarea of the project, the operator shall stabilize all disturbed areas. During non-germinating months, mulch or protective blanketing shall be applied as described in the plan. Areas not at finished grade, which will be reactivated within 1 year, may be stabilized in accordance with the temporary stabilization specifications. Those areas which will not be reactivated within 1 year shall be stabilized in accordance with the permanent stabilization specifications.
27. Permanent stabilization is defined as a minimum uniform, perennial 70% vegetative cover or other permanent non-vegetative cover with a density sufficient to resist accelerated erosion. Cut and fill slopes shall be capable of resisting failure due to slumping, sliding, or other movements.
28. E&S BMPs shall remain functional as such until all areas tributary to them are permanently stabilized or until they are replaced by another BMP approved by the local conservation district of the Department.
29. Upon completion of all earth disturbance activities and permanent stabilization of all disturbed areas, the owner and/or operator shall contact the local conservation district for an inspection prior to removal/conversion of the E&S BMPs.
30. After final site stabilization has been achieved, temporary erosion and sediment BMPs must be removed or converted to a permanent post construction stormwater management BMPs. Areas disturbed during removal or conversion of the BMPs shall be stabilized immediately. In order to ensure rapid revegetation of disturbed areas, such removal/conversions are to be done only during the germinating season.
31. Upon completion of all earth disturbance activities and permanent stabilization of all disturbed areas, areas, the owner and/or operator shall contact the local conservation district to schedule a final inspection.
32. Failure to correctly install E&S BMPs, failure to prevent sediment-laden runoff from leaving the construciton site, or failure to take immediate corrective action to resolve failure of E&S BMPs may result in administrative, civil, and/or criminal penalties being instituted by the Department as defined in Section 602 of the Pennsylvania Clean Streams Law. The Clean Streams Law provides for up to $10,000 per day in civil penalties, up to $10,000 in summary criminal penalties, and up to $25,000 in misdemeanor criminal penalties for each violation.

SITE SPECIFIC NOTES:

33. Concrete wash water shall be handled in the manner described on the plan drawings. In no case shall it be allowed to enter any surface waters or groundwater systems.
34. All channels shall be kept free of obstructions including but not limited to fill, rocks, leaves, woody debris, accumulated sediment, excess vegetation, and construction material/wastes.
35. Underground utilities cutting through any active channel shall be immediately backfilled and the channel restored to its original cross-section and protective lining. Any base flow within the channel shall be conveyed past the work area in the manner described in this plan until such restoration is complete.
36. Channels having riprap, Reno mattress, or gabion linings must be sufficiently over-excavated so that the design dimensions will be provided after placement of the protective lining.
37. Sediment basins and/or traps shall be kept free of all construction waste, wash water, and other debris having potential to clog the basin/trap outlet structures and/or pollute the surface water.
38. Sediment basins shall be protected from unauthorized acts by third parties.
39. Any damage that occurs in whole or in part as a result of basin or trap discharge shall be immediately repaired by the permittee in a permanent manner satisfactory to the municipality, local conservation district, and the owner of the damaged property.
40. Upon request, the applicant or his contractor shall provide an as-built (record drawing) for any sediment basin or trap to the municipal inspector, local conservation district or the Department.
41. Erosion control blanketing shall be installed on all slopes 3H:1V or steeper within 50 feet of a surface water and on all other disturbed areas specified on the plan maps and/or detail sheets.
42. Fill material for embankments shall be free of roots, or other woody vegetation, organic material, large stones, and other objectionable materials. The embankment shall be compacted in maximum

EROSION and SEDIMENTATION CONTROL

I. GENERAL NOTES:

1. This Erosion and Sedimentation Control Plan was prepared by the staff of Woodrow & Associates, Inc. under the direction of Mr. Timothy P. Woodrow, P.E.

Sediment Basins:

2. Approval of the use of skimmer(s) does not approve use of any skimmer(s) in violation of any patent, patent rights, and/or patent laws.
3. Baffles must be installed to allow basin maintenance and clean out.
4. Upon installation of the temporary sediment basin riser(s), an immediate inspection shall be done by a qualified site representative and the local conservation districtshall be notified in writing that the riser(s) is sealed.

Other BMPs:

5. Sediment must be removed from storm water inlet protection after each runoff event.
6. At stream crossings, 50-ft. buffer areas should be maintained. On buffers, clearing, sod disturbances, excavation, and equipment traffic should be minimized. Activities such as stacking logs, burning cleared brush, discharging rainwater from trenches, welding pipe sections, refueling and maintaining equipment should be accomplished outside of buffers.

Temporary Stabilization and Permanent Stabilization:

7. Straw mulch shall be applied in long strands, not chopped or finely broken.
8. The NPDES Boundary is equal to the limit of disturbance of the site and any off-site areas within the limit of disturbance that are the responsibility of the developer to install off-site facilities such as: utilities and roadways.

II. RECEIVING WATERSHED:

III. INTENT OF CONSERVATION PROGRAM:

The intent of this program is to prevent accelerated erosion of the exposed site soils during the construction and permanent life periods of the Development. The program requires retention of all sediments on the construction site while minimizing the impact of development on existing streams and adjacent properties.

These objectives will be achieved by minimizing exposure time of potentially erosive soils to runoff and installation of the temporary and permanent conservation practices in proper sequence with construction. The intent of this program should be understood and implemented throughout the entire development. The various construction trades should be appraised of this program and directed to prevent undue disturbance of prepared and protected surfaces.

IV. SURFACE STABILIZATION CRITERIA:

All denuded soil surfaces including soil stockpiles that are subject to erosion shall be stabilized immediately, either temporarily or permanently. Crushed stone on pavement subgrades is considered adequate protection. Disturbed areas which are not at finished grade and which will be redisturbed within one (1) year may be stabilized with a quick growing, temporary seeding mixture and mulch. During non-germination periods, mulch shall be applied at recommended rates. Germination period shall be from April 1st to June 15th and August 15th to October 15th, during non-germination periods mulched areas shall be limed, fertilized, seeded and remulched immediately.

Contractor/Applicant shall assume responsibility for the maintenance and operation of all erosion and sediment control facilities.

Silt fence must be installed parallel to existing contours and constructed in level alignments. The ends of the fence must be extended a minimum of eight (8) feet up slope and at forty-five (45) degrees to the main fence alignment.

If any of the measures contained within this plan prove inadequate at removing sediment from flows prior to discharge or stabilizing of the surfaces involved, additional measures must be immediately implemented by the Contractor/Applicant to eliminate all such problems. Said measures shall be approved by the local soil conservation district.

A reserve supply of crushed stone, silt fence, temporary seed and hay bales shall be maintained on site for emergency replacement of any failing erosion and sediment control measures.

V. EROSION CONTROL DEVICES / MAINTENANCE PROGRAM:

STABILIZED CONSTRUCTION ENTRANCE:

Entrances are to be constructed per Ch. 102 Standard Construction Detail #16 and the details provided with this plan set. The stabilized construction entrance(s) shall be maintained so that tire scrubbing activity does not become ineffective. Any buildup of mud or soil on the street shall be cleaned immediately by hand or mechanical sweeping.

SILT FENCES:

Silt fence shall be installed per Ch. 102 Standard Construction Details #19-22 and the details provided with this plan set, with rock outlets at existing and graded low points. Sediment shall be removed from silt fences when it reaches 1/2 the fence height or as directed by the local soil conservation district. Silt fencing which has been undermined or over topped shall be replaced with rock filter outlets immediately.

COMPOST FILTER SOCKS:

Compost Socks shall be installed per Ch. 102 Standard Construction Details #4-1 and the details provided with this plan set. Socks shall be inspected weekly and after each runoff event. Damaged socks shall be repaired according to manufacturer's specifications or replaced within 24 hours of inspection.

SEDIMENT TRAPS:

Sediment Traps shall be constructed per Ch. 102 Standard Construction Details #11-13 and the details provided with this plan set. Clean-out stakes shall be placed near the center of each trap. Accumulated sediment shall be removed when it reaches the clean-out elevation marked on the stake.

SEDIMENT BASINS:

Sediment Basins shall be constructed per Ch. 102 Standard Construction Details #1-10 and the details provided with this plan set. Clean-out stakes shall be placed half the distance from points of concentrated flow entering the basin to the riser. Accumulated sediment shall be removed when it reaches the clean-out elevation marked on the stake.

STORM INLET PROTECTION:

Inlet protection devices shall be constructed per Ch. 102 Standard Construction Details #28-32 and the details provided with this plan set. Inlet protection shall be maintained until all earthwork within the tributary drainage area has been completely stabilized.

SEDIMENT DISPOSAL:

Silt removed from temporary erosion and sediment control devices shall be disposed of on-site in landscaped areas located outside the 100 year flood plains, wetlands, steep slopes and drainage swales. Areas of sediment disposal shall be considered a critical vegetation area requiring immediate stablization.

Each drainage sub-area will require separate and unique erosion and sediment control measures. The contractor shall follow the specific construction sequence deemed appropriate by the local soil conservation district.

All BMP listed above require inspection weekly and after each runoff event. All required repairs and or replacement of BMP's must be done immediately.

VI. UTILITY TRENCH EXCAVATION:

GENERAL REQUIREMENTS:

Exposed trench excavations have high potential for accelerated erosion and sediment pollution. Since these excavations are usually located at lower elevation along or across earth disturbance sites, open trenches serve to concentrate sediment laden runoff and convey it to site boundaries or waterways. The most important erosion and sediment pollution control consideration for trench construction is the limiting and specific scheduling of work activities.

CONSTRUCTION REQUIREMENTS:

Limit advance clearing and grubbing operations to a distance equal to two times the length of pipe installation that can be completed in one day.

Work crews and equipment for trenching, placement of pipe, plug construction and backfilling will be self contained and separate from clearing and work crews and site restoration and stabilization operations.

All soils excavated from the trench shall be placed on uphill side of the trench.

Limit daily trench excavation to the length of pipe placement, plug installation and backfilling that can be completed the same day.

Water which accumulates in the open trench will be completely removed by pumping before pipe placement and/or backfilling begins. Water removed from the trench shall be pumped through a filtration device.

On the day following pipe placement and trench backfilling, the disturbed area will be graded to final contours and immediately stabilized.

Soils excavated from the existing surface layer should be stockpiled separately and returned as final surface layer following trench backfilling.

VII. FERTILIZATION, SEEDING AND MULCHING:

TEMPORARY COVER ON DISTURBED AREAS:

Disturbed areas not at finished grade which will be redisturbed within one (1) year may be seeded and mulched with a temporary seed cover.

PERMANENT COVER ON DISTURBED AREAS:

Disturbed areas which are either at finish grade or will not be redisturbed a within one (1) year period must be seeded and mulched with a permanent seed mixture.

All disturbed areas shall be stabilized immediately with a temporary seed and mulch mixture applied at the recommended rates. Site preparation of mulch and maintenance shall be performed in accordance with the Penn State University's Erosion Control & Conservation Plantings on Noncropland manual and Pennsylvania Department of Transportation publication form 408 specifications (latest edition). During nongermination periods, mulch must be applied at the recommended rates.

Graded areas shall be scarified or otherwise loosened to a depth of 3" to 5" prior to topsoil placement to permit the bonding of new topsoil.

MULCHING:

All seeded areas should be mulched or blanketed to minimize the potential for failure to establish adequate vegetated cover. Mulching may also be used as a temporary stabilization of disturbed areas in non-germinating seasons. Mulch shall be applied immediately after seeding or at the termination of grading operations during non-germinating seasons.

Straw and hay mulch should be anchored or tackified immediately after application to prevent being windblown. A tractor-drawn implement may be used to "crimp" the straw or hay into the soil about 3 inches deep. This method should be limited to slopes no steeper than 3H:1V. The machinery shall be operated on the contour.

Polymeric and gum tackifiers mixed and applied according to manufacturer's recommendations may be used to tack mulch. Avoid application during rain and on windy days. A 24 hour curing period and a soil temperature of 45 degrees F are typically required. Application should generally be heaviest at edges of seeded areas and at crests of ridges and banks to prevent loss. The remainder of the area shall have binder applied uniformly. Binders may only be applied after mulch is spread or sprayed onto the mulch as it is being blown onto the soil.

Synthetic binders, or chemical binders, may be used as recommended by the manufacturer to anchor mulch provided that sufficient documentation is provided to show they are non-toxic to native plant and animal species.

Mulch on slopes of 8% or steeper should be held in place with netting. Light-weight plastic, fiber, or paper nets may be stapled over the mulch according to manufacturer's recommendations.

Shredded paper hydromulch should not be used on slopes steeper than 5%. Wood fiber hydromulch may be applied on steeper slopes provided a tacifier is used. The application for any hydromulch should be 2000 lb/acre at a minimum.

MULCH APPLICATION RATES

Mulch Type:	Application Rate (Min.)			Notes:
	Per Acre:	Per 1,000 S.F.	Per 1,000 S.Y.	
Straw	3 tons	140 lbs.	1,240 lbs.	Either wheat or oat straw, free of weeds, not chopped or finely broken
Hay	3 tons	140 lbs.	1,240 lbs.	Timothy, mixed clover and timothy or other native forage grasses
Wood Chips	4-6 tons	185-275 lbs.	1,650-2500 lbs.	May prevent germination of grasses and legumes
Hydromulch	1 ton	47 lbs.	415	See limitations above

VIII. SEEDING SCHEDULE:

Seeding to conform to specifications outlined in Section 804 – Seeding and Soil Supplements of PADOT Publication 408/2003 (latest revision).

A soils test should be performed in order to determine actual lime and fertilizer needs of the project site instead of using the generic application rates listed below.

TEMPORARY SEEDING SPECIFICATION – FORMULA E:

100% ANNUAL RYEGRASS (LOLIUM MULTIFLORUM):	10.0 lbs./1,000 s.y.

PERMANENT SEEDING SPECIFICATION – FORMULA B:

70% Tall Fescue (Festuca Arunoinacea var., Kentucky 31):	15.0 lbs./1,000 s.y.
30% Creeping Red Fescue or Chewings Fescue:	6.0 lbs./1,000 s.y.

SEEDING RATES FOR THE ABOVE MIXTURES:

Spread seeds where indicated and at the rates specified above (and Table A, Pub 408, Section 804). Spread seeds within the following dates, or as otherwise indicated or directed:

* Formula B: – March 15 to June 01
  August 01 to October 15
* Formula E: – March 15 to October 15

Extend seeding dates where project conditions warrant. Apply full treatment or apply only 50% of the permanent seeding and soil supplements and apply the remaining 50% within the next seeding dates.

Place mulch, hay or straw immediately after seeding or within 48 hours after seeding is completed. Place hay or straw uniformly, in a continuous blanket, until seeding is completed. If directed, increase the rate of application, depending upon the material used, season, soil conditions or method of application.

SOIL SUPPLEMENTS:

Pulverized agricultural limestone and commercial fertilizer shall be applied to all disturbed areas which are to be seeded in both temporary and permanent conditions at the following rates:

Pulverized Agricultural Limestone:	800 lbs./1,000 s.y.
10-20-20 Analysis Commercial Fertilizer	140 lbs./1,000 s.y.
30-0-0 Ureaform Fertilizer	50 lbs./1,000 s.y.
– OR –	
32-0-0 to 38-0-0 Sulfur Coated Urea Fertilizer	59 to 50 lbs./1,000 s.y.
– OR –	
31-0-0 IBDU Fertilizer	61 lbs./1,000 s.y.

ERNMX-180 RAIN GARDEN MIX

20.00%	Panicum rigidulum	Redtop Panic Grass
20.00%	Schizachyrium scoparium	Little Bluestem
10.00%	Elymus virginicus	Virginia Wild Rye
5.00%	Carex vulpinoidea	Fox Sedge
5.00%	Chasmanthium latifolium	River Oats
5.00%	Echinacea purpurea	Purple Coneflower
5.00%	Liatris spicata	Marsh (Dense) Blazing Star
5.00%	Rudbeckia hirta	Black Eyed Susan
3.00%	Monarda fistulosa	Wild Bergamot
3.00%	Penstemon digitalis	Tall White Beard Tongue
2.00%	Andropogon gerardii	Big Bluestem
2.00%	Asclepias incarnata	Swamp Milkweed
2.00%	Aster novae-angliae	New England Aster
2.00%	Baptisia australis	Blue False Indigo
2.00%	Geum laciniatum	Rough Avens
2.00%	Senna hebecarpa	Wild Senna
2.00%	Tradescantia ohiensis	Ohio Spiderwort
2.00%	Verbena hastata	Blue Vervain
2.00%	Zizia aurea	Golden Alexanders
1.00%	Agrostis perennans	Autumn Bentgrass

Seeding Rate: 15 lb per acre, or 1/3-1/2 lb per 1,000 sq ft

Used where water quality, wildflower beauty, and wildlife are important. This mix should only be mowed during the dormant season.

A companion crop, such as annual rye, shall be applied in conjunction with the above seed mixes to help in binding the seed to the fresh soil while it germinates.

IX. SOILS RESOLUTIONS:

Winter Grading:

Contractor to ensure proper stablization. Methods to include, seeding and mulching at the recommended rates and where necessary, the placement of an approved erosion control blanket.

Road Fill

Contractor to ensure all fill used for roadway construction is placed and compacted in appropriate lifts. Should material not be suitable for roadway construction the contractor may import suitable material from an area within the permitted area.

Topsoil

Contractor to ensure proper stablization. Methods to include, seeding and mulching at the recommended rates and where necessary, the placement of an approved erosion control blanket.

Contractor shall consider soils testing to ensure topsoil is suitable to produce and sustain proper growth. Should the topsoil be lacking of the nutrients to produce growth the contractor shall consider applying lime and/or fertilizers at the rates recommended by the project landscape consultant and/or the local conservation district.

Topsoil may be imported from an area within the permitted area proven to be suitable.

Ponds, Dikes and Levees Embankments

Contractor to ensure all fill used for basin embankment construction is placed and compacted in appropriate lifts. Should material not be suitable for basin construction the contractor may import suitable material from an area within the permitted area.

Contractor to ensure proper stablization. Methods to include, seeding and mulching at the recommended rates and where necessary the placement of an approved erosion control blanket.

Terraces, diversions and waterways

Contractor to ensure all earthwork associated with swales, diversion berms and/or watercourses is adequately stabilized with an approved erosion and sediment control blanket and/or seeding and mulching applied at the recommended rates.

Should erosion continue the contractor shall consult the design engineer, the local conservation district, and take appropriate measures to correct the problems. Corrective measures may include but are not limited to the following:

Additional seeding and mulching, the placement of sod, armoring the channel with a stronger stabilization blanket, or the placement of rip-rap.

X. POST-CONSTRUCTION MAINTENANCE PROGRAM:

Post-Construction maintenance of all implemented BMP's shall include but not be limited to the following:

1. Check all vegetated areas after any runoff events to identify any areas showing accelerated erosion. If any area is identified as eroding, these areas are to be stabilized using methods described on this plan.
2. All storm structures shall be inspected and cleaned of debris annually or as necessary to maintain full capacity of the storm system.
3. Any underground detention system shall be inspected annually for debris buildup and structural integrity. If excessive debris is present the underground system shall be flushed and reinspected.

XI. STANDARD NOTE TO COMPLY WITH NPDES CHECKLIST ITEM #2.b.xv:
(#3.b.xv for an Individual NPDES Permit)

If the site will need to import or export material from the site, the responsibility for performing environmental due diligence and determination of clean fill will rest with the permittee.

1. Clean Fill is defined as: Uncontaminated, non-water soluble, non-decomposable, inert, solid material. The term includes soil, rock, stone, dredged material, used asphalt, and brick, block or concrete from construction and demolition activities that is separate from other waste and is recognized as such. The term does not include materials placed in or on the waters of the Commonwealth unless otherwise authorized. (The term "used asphalt" does not include milled asphalt or asphalt that has been processed for re-use).
2. Clean Fill affected by a spill or release of a regulated substance: Fill materials affected by a spill or release of a regulated substance still qualifies as clean fill provided the testing reveals that the fill material contains concentrations of regulated substances that are below the residential limits in Tables FP-1a and FP-1b found in the Department's policy "Management of Fill".
3. Any person placing clean fill that has been affected by a spill or release of a regulated substance must use form FP-001 to certify the origin of the fill material and the results of the analytical testing to qualify the material as clean fill. Form FP-001 must be retained by the owner of the property receiving the fill.
4. Environmental due diligence: The applicant must perform environmental due diligence to determine if the fill materials associated with the project qualify as clean fill. Environmental due diligence is defined as: Investigative techniques, including, but not limited to, visual property inspections, electronic data base searches, review of property ownership, review of property use history, Sanborn maps, environmental questionaires, transaction screens, analytical testing, environmental assessments or audits. Analytical testing is not a required part of due diligence unless visual inspection and/or review of the past land use of the property indicates that the fill may have been subjected to a spill or release of regulated substance. If the fill may have been affected by a spill or release of a regulated substance, it must be tested to determine if it qualifies as clean fill. Testing should be performed in accordance with Appendix A of the Department's policy "Management of Fill".

Fill material that does not qualify as clean fill is regulated fill. Regulated fill is waste and must be managed in accordance with the Department's municipal or residual waste regulations based on 25 Pa. Code Chapter 287 Residual Waste Management or 271 Municipal Waste Management, whichever is applicable. These regulations are available on-line at www.pacode.com

XII. MONITORING, INSPECTION, AND REPORTING REQUIREMENTS:

Visual Inspections:

The permittee or co-permitee(s) must ensure that visual site inpsections are conducted weekly, and within 24 hours after each measurable rainfall event throughout the duration of construction and until the receipt and acknowledgement of the N.O.T. by the department or authorized conservation district. The visual site inspections and reports shall be completed in a format provided by the department, and conducted by qualified personnel, trained and experienced in erosion and sediment control, to ascertain that E&S BMP's and PCSM BMP's are properly constructed and maintained to effectively minimize pollution to the waters of this commonwealth. A written report of each inspection shall be kept and include at a minimum:

(1) A summary of site conditions, E&S BMP and PCSM BMP, implementation and maintenance and compliance actions; and

(2) The date, time, name and signature of the person conducting the inspection.

Noncompliance Reporting:

Where E&S, PCSM or PPC BMP's are found to be inoperative or ineffective during an inspection or any other time, the permittee and co-permittee(s) shall, within 24 hours, contact the department or authorized conservation district, by phone or personal contact, followed by the submission of a written report within 5 days of the initial contact. Noncompliance reports shall include the following information:

(1) Any condition on the project site which may endanger public health, safety, or the environment, or involved incidents which cause or threaten pollution;

(2) The period of noncompliance, including exact dates and times and/or anticipated time when the activity will return to compliance;

(3) Steps being taken to reduce, eliminate, and prevent recurrence of the noncompliance; and

(4) The date or schedule of dates, and identifying remedies for correcting noncompliance conditions.

Reduction, Loss, or Failure of the BMP's:

Upon reduction, loss or failure of the BMP's, the permittee and co-permittee shall take immediate action to restore the BMP's or provide an alternative method of treatment. Such restored BMP's or alternative treatment shall be at least as effective as the original BMP's.

Termination of Coverage:

N.O.T.: Upon permanent stabilization of earth disturbance activities associated with construction activity that are authorized by this permit and when BMP's identified in the PCSM Plan have been properly installed, the permittee and/or co-permittee of the facility must submit a N.O.T. form that is signed in accordance with Part B, Section 1.c, Signatory Requirementes, of the NPDES permit. All letters certifying discharge termination are to be sent to the department or authorized conservation district. The N.O.T. must contain the following information: facility name, address and location, operator name and address, permit number, identification and proof of acknowledgment from the person(s) who will be responsible for the operation and maintenance of the PCSM BMP's in accordance with the approved PCSM Plan, and the reason for the permit termination. Until the permittee has recieved written acknowledgement of the N.O.T., the permittee will remain responsible for the operation and maintaining all E&S BMP's and PCSM BMP's on the project site and will be responsible for the violations occurring on the project site.

Completion Certificate and Final Plans:

Within 30 days after the completion of the earth disturbance activities authorized by this permit, including the permanent stabilization of the site and proper installation of PCSM BMP's in accordance with the approved PCSM Plan, or upon submission of the N.O.T., the permittee shall file with the department or authorized conservation district a statement signed by a licensed professional and by the permittee certifying that work has been performed in accordance with the terms and conditions of the NPDES permit and the approved E&S and PCSM Plans.

XIII. WETLANDS AND WATERS RESTORATION:

Wetland Restoration Specifications:

Subsoil Preparation:

- Subsoil shall be free from hard clods, stiff clay, hardpan, ashes, slag, construction debris, petroleum hydrocarbons, or other undesirable material. Subsoil must not be delivered in a frozen or muddy state.
- Scarfiy the subsoil to a depth of 8 to 10 inches with a disk, rototiller, or similar equipment.
- Roll the subsoil under optimum moisture conditions to a dense seal layer with four to six passes of a sheepsfoot roller or equivalent. The compacted seal layer shall be at least 8 inches thick.

Planting Soil (Topsoil):

- See Local Specifications for general Planting Soil requirements.
- Use a minimum of 12 inches of topsoil in marsh areas of the Wetland. If natrual topsoil from the site is to be used it must have at least 8 percent organic carbon content (by weight) in the A-horizon for sandy soils and 12% for other soil types.
- If planting soil is being imported it should be made up of equivalent proportions of organic and mineral materials.
- Lime should not be added to planting soil unless absolutely necessary as it may encourage the propagation of invasive species.
- The final elevations and hydrology of the wetland zones should be evaluated prior to planting to determine if grading or planting changes are required.

Vegetation:

- Plant Lists for Constructed Wetlands can be found in Appendix B of the Pennsylvania Stormwater Best Management Practices Manual. No substitutions of specified plants will be accepted without prior approval of the designer. Planting locations shall be based on the Planting Plan and directed in the field by a qualified wetland ecologist.
- A wetland plant stock shall exhibit live buds or shoots. All plant stock shall be turgid, firm, and resilient. Internodes of rhizomes may be flexible and not necessarily rigid. Soft or mushy stock shall be rejected. The stock shall be free of deleterious insect infestation, disease and defects such as knots, sun-scald, injuries, abrasions, or disfigurement that could adversely affect the survival or performance of the plants.
- All stock shall be free from invasive or nuisance plants or seeds such as those listed in Appendix B of the Pennsylvania Stormwater Best Management Practices Manual.
- During all phases of the work, including transport and onsite handling, the plant materials shall be carefully handled and packed to prevent injuries and desiccation. During transit and onsite handling, the plant material shall be kept from freezing and shall be kept covered, moist, cool, out of the weather, and out of the wind and sun. Plants shall be watered to maintain moist soil and/or plant conditions until accepted.
- Plants not meeting these specifications or damaged during handling, loading, and unloading will be rejected.
- Detailed planting specifications can be found in Appendix B of the Pennsylvania Stormwater Best Management Practices Manual.

Outlet Control Structures:

- Outlet control structures shall be constructed of non-corrodible material.
- Outlets shall be resistant to clogging by debris, sediment, floatables, plant material, or ice.

Waters Restoration Specifications:

- Upon completion of work within a stream channel, disturbed areas must be stabilized to prevent erosion before diverted flows are redirected into the disturbed area of the channel. The type of stabilization to be used depends upon the size of the stream channel, its flow conditions, soils, and considerations for migration of acquatic life. The form of bank protection should mimic the natural conditions as much as possible, while providing sufficient protection for the anticipated flows from the design storm events.

CONSTRUCTION SEQUENCE

At least 7 days before starting any earth disturbance activities, the operator shall invite all contractors involved in those activities, the landowner, all appropriate municipal officials, the erosion and sediment control plan preparer, the designated Licensed Professional, and the local Conservation District to an on-site meeting. Also, at least 3 days before starting any earth disturbance activities, all contractors involved in those activities shall notify the Pennsylvania One Call Incorporated System at 811 or 1-800-242-1776 for buried utilities locations.

All earth disturbance activities shall proceed in accordance with the outlined sequence on these plans. Each stage shall be completed before any following stage is initiated; clearing and grubbing shall be limited only to those areas described in each stage. General site clearing, grubbing, and topsoil stripping may not commence in any stage or phase of the project until the E&S BMPs specified by the Construction Sequence for that stage or phase have been installed and are functioning as described in this document. Deviation from this sequence must be approved in writing from the local Conservation District or by DEP prior to implementation.

Upon temporary cessation of an earth disturbance or any stage or phase of an activity where a cessation of earth disturbance activities exceed 4 days, the site shall be immediately seeded, mulched or otherwise protected from accelerated erosion and sedimentation pending future earth disturbance activities.

Per NPDES requirements "Upon the installation or stabilization of all perimeter sediment control BMPs and at least 3 days prior to proceeding with the bulk earth disturbance activities, the permittee or co-permittee shall provide notification to the Department or authorized conservation district.

PHASE ONE CONSTRUCTION:

1. Stakeout and flag Limit of Disturbance.

LAST NUMBER: Within 30 days after the completion of earth disturbance activities authorized by the NPDES permit, inlcuding the permanent stabilization of the site and proper installation of PCSM BMPs in accordance with the approved PCSM Plan, or upon submission of the NOT if sooner, the permittee shall file with the Department or authorized conservation district a statement signed by a licensed professional and by the permittee certifying that work has been performed in accordance with the terms and conditions of the NPDES permit and the approved E&S and PCSM Plans. Completion certificates are needed to ensure that all work has been performed in accordance with the terms and conditions of the NPDES permit and the approved E&S and PCSM Plans.

LIMITATION OF SOILS PERTAINING TO EARTHMOVING

SOILS NAME:	CUTBANKS CAVE	CORROSIVE TO CONCRETE/STEEL	DROUGHTY	EASILY ERODIBLE	FLOODING	DEPTH TO SATURATED ZONE/SEASONABLE HIGH WATER TABLE	HYDRIC/HYDRIC INCLUSIONS	LOW STRENGTH/LANDSLIDE PRONE	SLOW PERCOLATION	PIPING	POOR SOURCE OF TOPSOIL	FROST ACTION	SHRINK – SWELL	POTENTIAL SINKHOLE	PONDING	WETNESS
X	X	C/S	X	X	X	X	X	X	X	X	X	X	X	X	X	X
X	X	C/S	X	X	X	X	X	X	X	X	X	X	X	X	X	X
X	X	C/S	X	X	X	X	X	X	X	X	X	X	X	X	X	X
X	X	C/S	X	X	X	X	X	X	X	X	X	X	X	X	X	X
X	X	C/S	X	X	X	X	X	X	X	X	X	X	X	X	X	X
X	X	C/S	X	X	X	X	X	X	X	X	X	X	X	X	X	X

SPECIFIC LIMITATION RESOLUTIONS:

- CUTBANKS CAVE
  Trench wall reinforcement shall be provided on-site if necessary to stabilize construction related trenching.
- CORROSIVE TO CONCRETE/STEEL
  Soils testing should be conducted to determine the actual risk of corrosion to concrete or steel and if necessary, concrete mixes adjusted and steel coated to withstand the soil corrosiveness.
- DROUGHTY
  Special consideration should be applied to ensure that seed mixes and proposed plantings have sufficient water and nutrients within the soil to establish growth.
- EASILY ERODIBLE
  Additional erosion control blanketing shall be considered to control any potential erosion in sloped areas.
- FLOODING
  Special consideration shall be applied to ensure that the proposed development has adequate drainage pathways and/or infiltration rates to prevent potential flooding.
- DEPTH TO SATURATED ZONE/SEASONAL HIGH WATER TABLE
  Special consideration shall be taken in the design of all proposed BMPs to ensure that any existing saturated zones or high water tables will not impact the proposed design.
- HYDRIC/HYDRIC INCLUSIONS
  Hydric soils shall be scarified and mixed with a planting soils mixture and/or topsoil to improvie the vegetative properties of the soil.
- LOW STRENGTH/LANDSLIDE PRONE
  Additional erosion control mats or other slope reinforcment shall be considered to assist in landslide and erosion prevention.
- SLOW PERCOLATION
  Scarification of the subsoil shall be a consideration during final grading and topsoil placement to improve the infiltration rates of the subsoil.
- PIPING
  Extra care must be taken in site grading to locate and identify any potential sinkhole areas, and if discovered, immediate measures shall be taken to remediate any sinkhole locations.
- POOR SOURCE OF TOPSOIL
  If on-site stockpiles are deemed to be poor for use in topsoil, improved topsoil shall be imported to the site and utilized for final site grading.
- FROST ACTION
  Special care must be taken to ensure that the soil is not frozen solid when grading the site to the proposed elevations. If large areas of the project site appear to be frozen, the soil shall be thawed before being set to final design elevations.
- SHRINK – SWELL
  If the areas prone to soil shrink and/or swell are located around proposed structures (buildings, roadways, sidewalks, etc.), consideration shall be taken to removing and replacing these soils. Shrink and/or swell areas located in open space areas can be left as they are.
- POTENTIAL SINKHOLE
  If any areas on the subject parcel appear to be prone to sinkholes, sinkhole remediation shall be immediately applied to said areas. A standalone sinkhole remediation plan shall be created and kept on site at all times.
- PONDING
  Scarification of the subsoil shall be a consideration during final grading and topsoil placement to improve the infiltration rates of the subsoil.
- WETNESS
  Scarification of the subsoil shall be a consideration during final grading and topsoil placement to improve the infiltration rates of the subsoil. Additional plantings shall be considered to be placed on-site to assist in removing extra wetness from the soil.

No.:	DATE:	DESCRIPTION:

REVISIONS

COMMONWEALTH OF PENNSYLVANIA
REGISTERED PROFESSIONAL
TIMOTHY P. WOODROW
ENGINEER
No. 038735-E

0'

ONLY PLANS INCORPORATING A RAISED PROFESSIONAL SEAL ARE CONSIDERED TO BE OFFICIAL AND RELIED UPON BY THE USER.

THIS PLAN HAS BEEN PREPARED SPECIFICALLY FOR THE APPLICANT AND PROJECT DESIGNATED HEREON. ANY MODIFICATION, REVISION, DUPLICATION OR USE WITHOUT WRITTEN CONSENT OF WOODROW & ASSOCIATES, INC. IS PROHIBITED BY LAW.

© COPYRIGHT 2015 WOODROW & ASSOCIATES, INC. – ALL RIGHTS RESERVED

Parcel Information:
TP 63-00-01108-008
Block 1 Unit 7
Deed Bk: 5658
Pg: 2573
Gross Tract:
55.5618 Acres

Record Owner:
DORIS Y &
RONALD W MARKLEY
REVOCABLE TRUST
2325 Chestnut Avenue
Norristown, PA 19403

Applicant:
MikeLen, LLC
Attn: Len DelGrippo
2965 W. Germantown Pike
Norristown, PA 19403

PRELIMINARY PLAN (Not To Be Recorded)
EROSION & SEDIMENTATION CONTROL NOTES
MARKLEY FARM PROPERTY
WEST NORRITON TOWNSHIP – MONTGOMERY COUNTY – PENNSYLVANIA

WOODROW & ASSOCIATES, INC.
MUNICIPAL / CIVIL CONSULTING ENGINEERS
1108 North Bethlehem Pike / Suite 5 – Lower Gwynedd – PA 19002
Phone: (215) 542-5648 Fax: (215) 542-5679
Web: www.WoodrowInc.com

Layer List: Sht30_E&S-Notes
Plan Date: NOV 06, 2015
Job No: 11-0410 D
Design Mgr: J.H.K.
Proj. Mgr: T.P.W.
Sheet No: 30 of 34

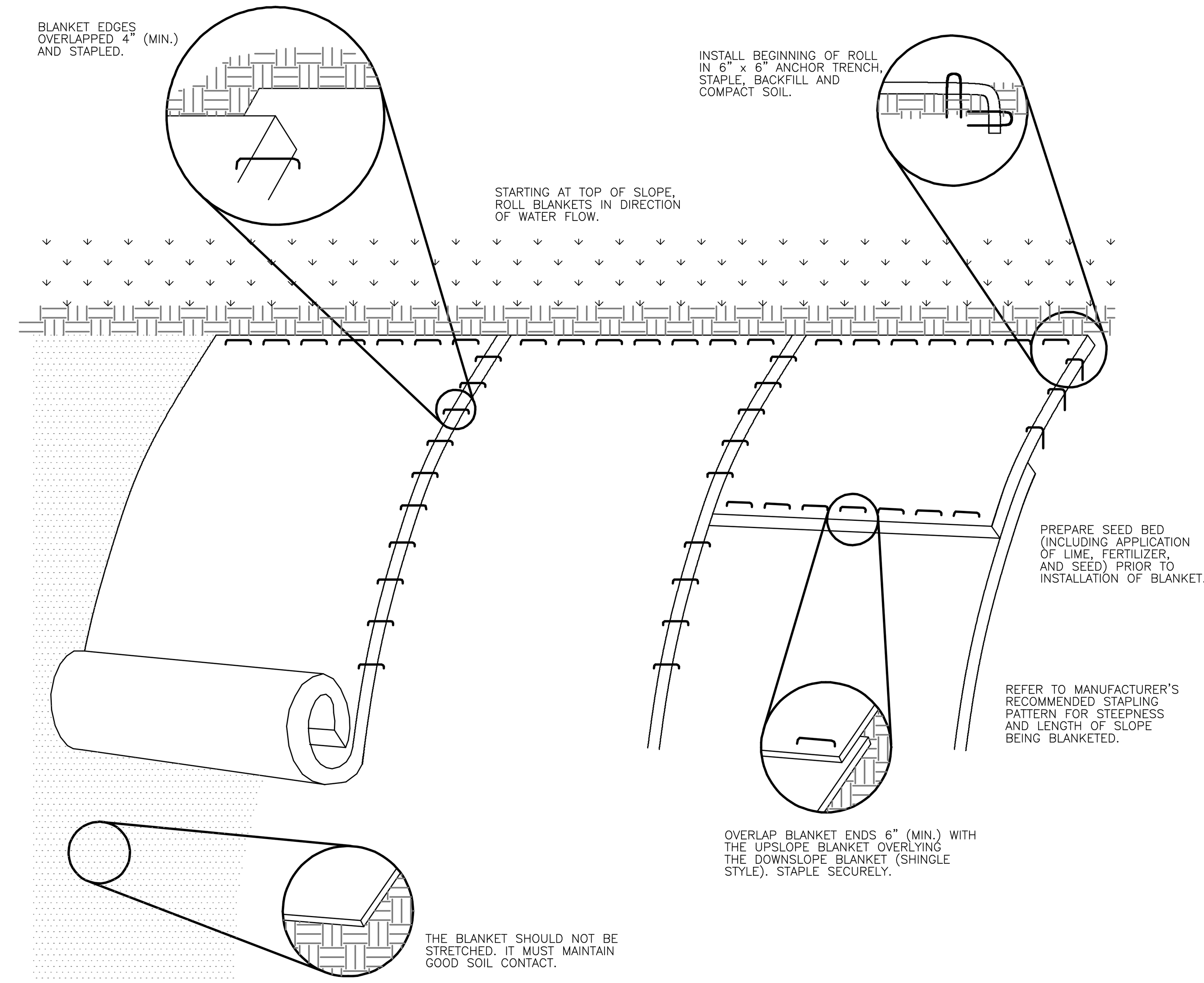

SEED AND SOIL AMENDMENTS SHALL BE APPLIED ACCORDING TO THE RATES IN THE PLAN DRAWINGS PRIOR TO INSTALLING THE BLANKET.

PROVIDE ANCHOR TRENCH AT THE TOE OF SLOPE IN SIMILAR FASHION AS AT TOP OF SLOPE.

SLOPE SURFACE SHALL BE FREE OF ROCKS, CLODS, STICKS, AND GRASS.

BLANKET SHALL HAVE GOOD CONTINUOUS CONTACT WITH UNDERLYING SOIL THROUGHOUT ENTIRE LENGTH. LAY BLANKET LOOSELY AND STAKE OR STAPLE TO MAINTAIN DIRECT CONTACT WITH SOIL. DO NOT STRETCH BLANKET.

THE BLANKET SHALL BE STAPLED IN ACCORDANCE WITH THE MANUFACTURER'S RECOMMENDATIONS.

BLANKETED AREAS SHALL BE INSPECTED WEEKLY AND AFTER EACH RUNOFF EVENT UNTIL PERENNIAL VEGETATION IS ESTABLISHED TO A MINIMUM UNIFORM 70% COVERAGE THROUGHOUT THE BLANKETED AREA. DAMAGED OR DISPLACED BLANKETS SHALL BE RESTORED OR REPLACED WITHIN 4 CALENDAR DAYS.

(PADEP EROSION and SEDIMENT POLLUTION CONTROL PROGRAM MANUAL – MARCH 2012)
(STANDARD CONSTRUCTION DETAIL #11–1)

EROSION CONTROL BLANKET INSTALLATION

Not to Scale

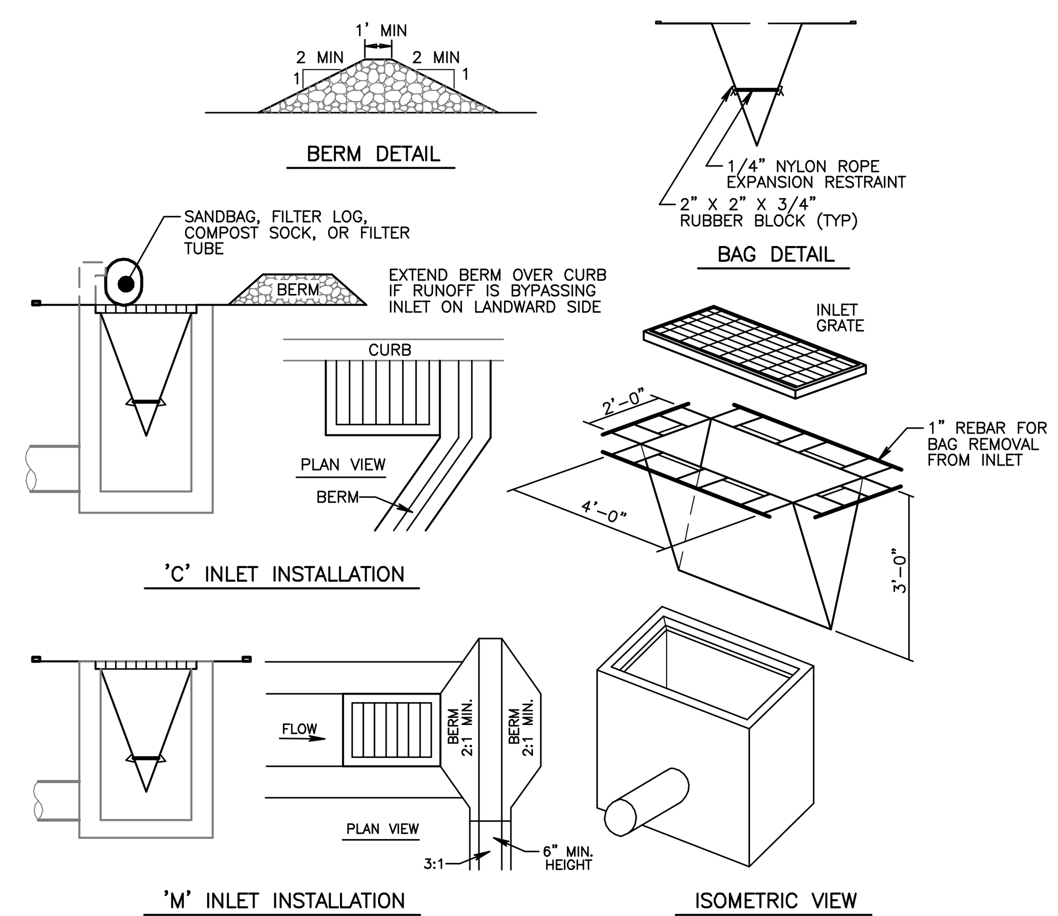

* ADAPTED FROM PENNDOT RC–70, 2008 EDITION

* EARTHEN BERM TO BE STABILIZED WITH TEMPORARY OR PERMANENT VEGETATION

MAXIMUM DRAINAGE AREA = 1/2 ACRE.

INLET PROTECTION SHALL NOT BE REQUIRED FOR INLETS TRIBUTARY TO SEDIMENT BASIN OR TRAP. BERMS SHALL BE REQUIRED FOR ALL INSTALLATIONS.

ROLLED EARTHEN BERM SHALL BE MAINTAINED UNTIL ROADWAY IS STONED. ROAD SUBBASE BERM SHALL BE MAINTAINED UNTIL ROADWAY IS PAVED. SIX INCH MINIMUM HEIGHT ASPHALT BERM SHALL BE MAINTAINED UNTIL ROADWAY SURFACE RECEIVES FINAL COAT.

AT A MINIMUM, THE FABRIC SHALL HAVE A MINIMUM GRAB TENSILE STRENGTH OF 120 lbs, A MINIMUM BURST STRENGTH OF 200 psi, AND A MINIMUM TRAPEZOIDAL TEAR STRENGTH OF 50 lbs. FILTER BAGS SHALL BE CAPABLE OF TRAPPING ALL PARTICLES NOT PASSING A No. 40 SIEVE.

INLET FILTER BAGS SHALL BE INSPECTED ON A WEEKLY BASIS AND AFTER EACH RUNOFF EVENT. BAGS SHALL BE EMPTIED AND RINSED OR REPLACED WHEN HALF FULL OF WHEN FLOW CAPACITY HAS BEEN REDUCED SO AS TO CAUSE FLOODING OR BYPASSING OF THE INLET. DAMAGED OR CLOGGED BAGS SHALL BE REPLACED. A SUPPLY SHALL BE MAINTAINED ON SITE FOR REPLACEMENT OF BAGS. ALL NEEDED REPAIRS SHALL BE INITIATED IMMEDIATELY AFTER THE INSPECTION. DISPOSE OF ACCUMULATED SEDIMENT AS WELL AS ALL USED BAGS ACCORDING TO THE PLAN NOTES.

** DO NOT USE ON MAJOR PAVED ROADWAYS WHERE PONDING MAY CAUSE TRAFFIC HAZARDS **

(PADEP EROSION and SEDIMENT POLLUTION CONTROL PROGRAM MANUAL – MARCH 2012)
(STANDARD CONSTRUCTION DETAIL #4–15 and #4–16)

FILTER BAG INLET PROTECTION

Not to Scale

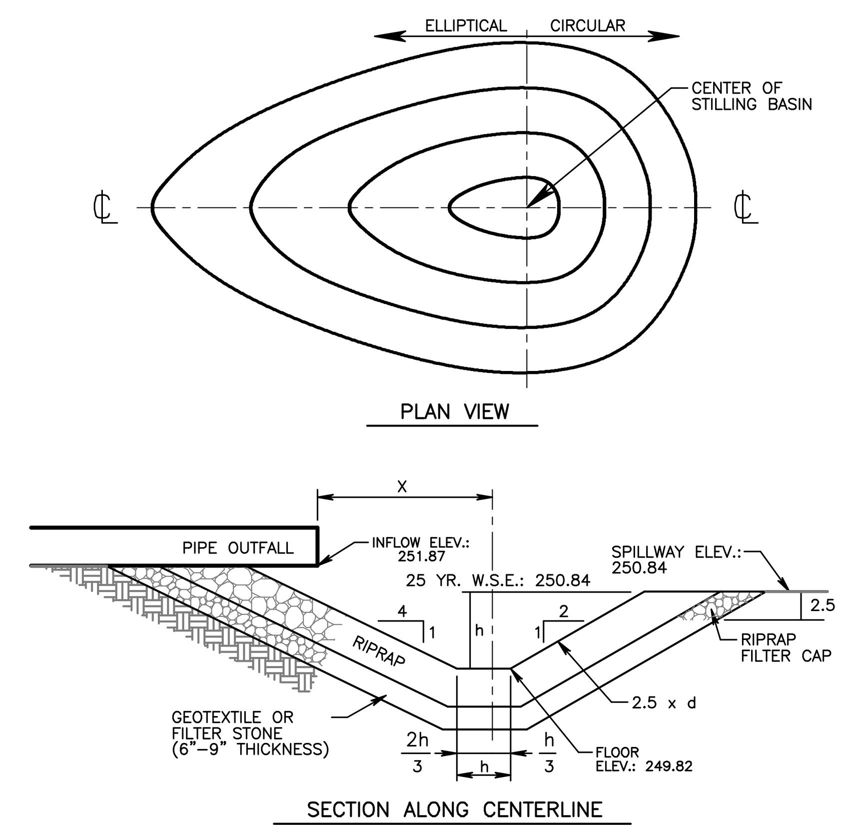

ADAPTED FROM USDOT, FHWA HEC 14

OUTLET NO.	X (ft.)	h (ft.)	RIPRAP SIZE (R_)	d50 STONE SIZE d (in.)

RIPRAP THICKNESS SHALL BE 1.5 TIMES THE MAXIMUM STONE SIZE.

(PADEP EROSION and SEDIMENT POLLUTION CONTROL PROGRAM MANUAL – MARCH 2012)
(STANDARD CONSTRUCTION DETAIL #9–4)

STILLING BASIN

Not To Scale

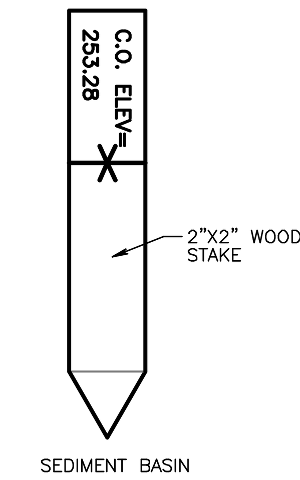

CLEAN–OUT STAKE DETAIL

Not To Scale

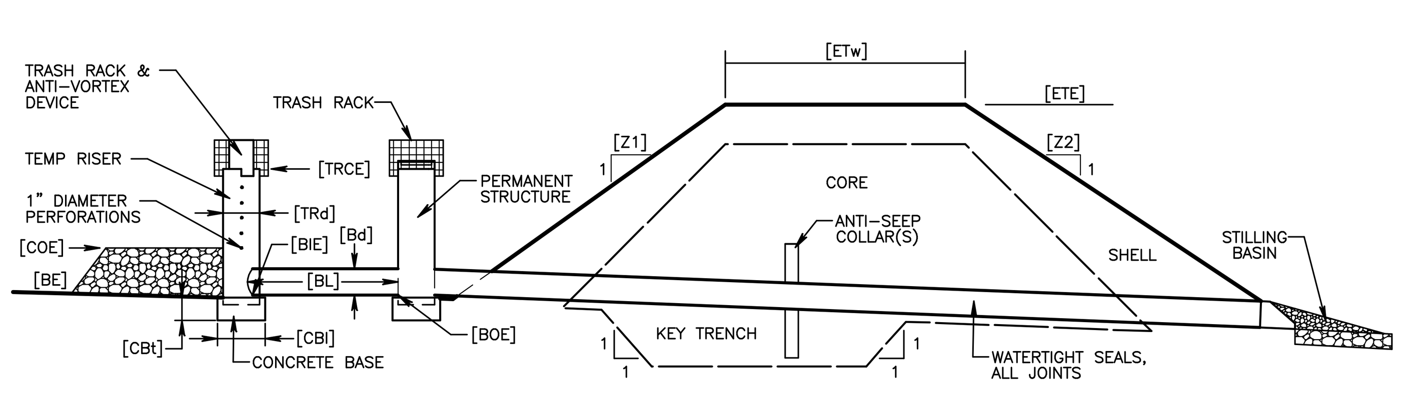

EMBANKMENT SECTION ALONG PRINCIPAL SPILLWAY

CLEAN OUT STAKES SHALL BE PLACED NEAR CENTER OF BASIN. ACCUMULATED SEDIMENT SHALL BE REMOVED WHEN IT REACHES THE CLEAN OUT ELEVATION ON THE STAKE.

BASIN NO	Z1 (Ft)	Z2 (Ft)	TEMPORARY RISER DIA [TRd] (In)	TEMPORARY RISER CREST ELEV [TRCE] (Ft)	TEMPORARY RISER MAT'L	BARREL DIA [Bd] (In)	BARREL INLET ELEV [BIE] (Ft)	BARREL MAT'L	BARREL LENGTH [BL] (Ft)	BARREL OUTLET ELEV [BOE] (Ft)	EMBANKMENT TOP ELEV [ETE] (Ft)	EMBANKMENT TOP WIDTH [ETw] (Ft)	CLEAN OUT ELEV [COE] (Ft)	BOTTOM ELEV [BE] (Ft)
BASIN 'A'														

BASIN NO	RISER PERFORATIONS NO HOLES PER ROW	RISER PERFORATIONS VERTICAL SPACING OF ROWS (Ft)	CONCRETE BASE LENGTH [CBl] (In)	CONCRETE BASE WIDTH [CBw] (In)	CONCRETE BASE THICKNESS [CBt] (In)
BASIN 'A'					

* SEE SEDIMENT BASIN TEMPORARY RISER & PERMANENT STRUCTURE, EMERGENCY SPILLWAY, TRASH RACK & ANTI–VORTEX DEVICE, ENERGY DISSIPATER, AND SEDIMENT STORAGE DEWATERING FACILITY DETAILS.

SEDIMENT BASINS, INCLUDING ALL APPURTENANT WORKS, SHALL BE CONSTRUCTED TO THE DETAIL AND DIMENSIONS SHOWN ON THE E&S PLAN DRAWINGS.

AREA UNDER EMBANKMENT SHALL BE CLEARED, GRUBBED, AND STRIPPED OF TOPSOIL TO A DEPTH OF TWO FEET PRIOR TO ANY PLACEMENT AND COMPACTION OF EARTHEN FILL. FILL MATERIAL FOR THE EMBANKMENTS SHALL BE FREE OF ROOTS, OR OTHER WOODY VEGETATION, ORGANIC MATERIAL, LARGE STONES, AND OTHER OBJECTIONABLE MATERIALS. THE EMBANKMENT SHALL BE COMPACTED IN LAYERED LIFTS OF NOT MORE THAN 6" TO 9". THE MAXIMUM ROCK SIZE SHALL BE NO GREATER THAN 2/3 THE LIFT THICKNESS. UPON COMPLETION, THE EMBANKMENT SHALL BE SEEDED AND MULCHED OR OTHERWISE STABILIZED ACCORDING TO THE SPECIFICATIONS OF THE E&S PLAN DRAWINGS. TREES SHALL NOT BE PLANTED ON THE EMBANKMENT.

ALL SEDIMENT BASINS SHALL BE INSPECTED ON AT LEAST A WEEKLY BASIS AND AFTER EACH RUNOFF EVENT.

ACCESS FOR SEDIMENT REMOVAL AND OTHER REQUIRED MAINTENANCE ACTIVITIES SHALL BE PROVIDED.

A CLEAN–OUT STAKE SHALL BE PLACED NEAR THE CENTER OF EACH BASIN. ACCUMULATED SEDIMENT SHALL BE REMOVED WHEN IT HAS REACHED THE CLEAN–OUT ELEVATION ON THE STAKE AND THE BASIN RESTORED TO ITS ORIGINAL DIMENSIONS. DISPOSE OF MATERIALS REMOVED FROM THE BASIN IN THE MANNER DESCRIBED IN THE E&S PLAN.

BASIN EMBANKMENTS, SPILLWAYS, AND OUTLETS SHALL BE CHECKED FOR EROSION, PIPING AND SETTLEMENT. NECESSARY REPAIRS SHALL BE MADE IMMEDIATELY. DISPLACED RIPRAP WITHIN THE OUTLET ENERGY DISSIPATER SHALL BE REPLACED IMMEDIATELY. ACCUMULATED SEDIMENT SHALL BE REMOVED AND DISTURBED AREAS INSIDE THE BASIN STABILIZED BEFORE CONVERSION TO A STORMWATER MANAGEMENT FACILITY. THE DEVICE SHOWN IN STANDARD CONSTRUCTION DETAIL #7–16 MAY BE USED TO DEWATER SATURATED SEDIMENT PRIOR TO ITS REMOVAL. ROCK FILTERS SHALL BE ADDED AS NECESSARY.

(PADEP EROSION and SEDIMENT POLLUTION CONTROL PROGRAM MANUAL – MARCH 2012)
(STANDARD CONSTRUCTION DETAIL #7–8)

SEDIMENT BASIN/DETENTION BASIN EMBANKMENT AND SPILLWAY DETAIL

Not to Scale

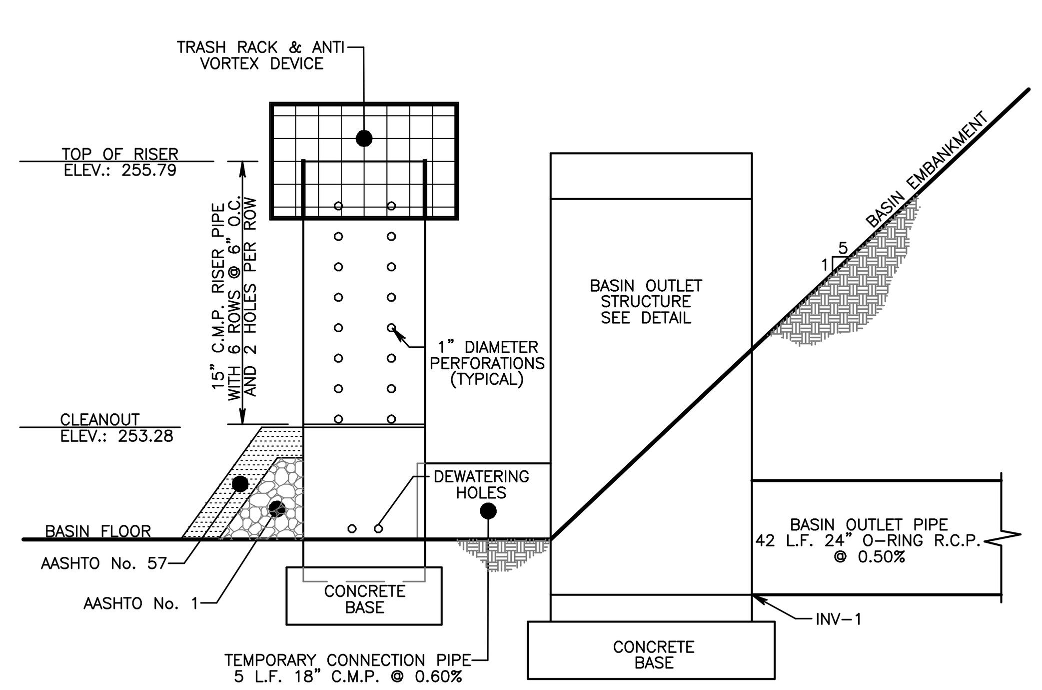

1. PERFORATIONS IN RISER TO BE SPACED 6" O.C. HORIZONTALLY TEMPORARY RISER PIPE TO REMOVED AFTER STABILIZATION.
2. ALL SECONDARY OUTLET CONFIGURATIONS WITHIN THE OUTLET STRUCTURE MUST BE SEALED AND PROTECTED AGAINST INFULTRATION INCLUDING GRATE SECTION UNLESS OTHERWISE NOTED.
3. RISER PIPE AND ROCK FILTER MUST BE INSPECTED ON A WEEKLY BASIS AND AFTER EACH RUNOFF EVENT.

SEDIMENTATION BASIN INFORMATION

SEDIMENTATION BASIN NUMBER	INV–1 ELEV. (FT.)	RISER PERFORATIONS ROWS @ 6" O.C.	RISER PERFORATIONS HOLES PER ROW	RISER PIPE TYPE & DIA.	TRANS PIECE TYPE & DIA.	SEDIMENT STORAGE ELEV. (FT.)	TOP OF RISER ELEV. (FT.)	TOP OF BERM ELEV. (FT.)	EMERGENCY FLOW ELEV. (FT.)	SPILLWAY INVERT ELEV. (FT.)
A										

SEE STANDARD CONSTRUCTION DETAIL #7–5, TRASH RACK AND ANTI–VORTEX DEVICE AND STANDARD CONSTRUCTION DETAIL #7–7, SEDIMENT BASIN TEMPORARY RISER. TOP OF TEMPORARY RISER EXTENSION (TRE) SHALL BE EQUAL TO OR ABOVE TEMPORARY RISER CREST ELEVATION (TRCE) AND 6 INCHES (MINIMUM) BELOW CREST OF EMERGENCY SPILLWAY. REMOVE FLAT GRATE FROM PERMANENT RISER FOR AS LONG AS BASIN FUNCTIONS AS A SEDIMENT REMOVAL BMP.

A MINIMUM 2 #8 REBAR SHALL BE PLACED AT RIGHT ANGLES AND PROJECTING THROUGH THE SIDES OF RISER TO ANCHOR IT TO CONCRETE BASE. REBAR SHALL PROJECT A MINIMUM OF 1/4 RISER DIAMETER BEYOND OUTSIDE OF RISER.

CONCRETE BASE SHALL BE POURED IN SUCH A MANNER TO INSURE THAT CONCRETE FILLS BOTTOM OF RISER TO INVERT OF THE OUTLET PIPE TO PREVENT RISER FROM BREAKING AWAY FROM THE BASE. MINIMUM BASE WIDTH EQUALS 2 TIMES RISER DIAMETER.

EMBEDDED SECTION OF ALUMINUM OR ALUMINIZED PIPE SHALL BE PAINTED WITH ZINC CHROMATE OR EQUIVALENT.

CLOGGED OR DAMAGED SPILLWAYS SHALL BE REPAIRED IMMEDIATELY. TRASH AND OTHER DEBRIS FROM THE BASIN AND RISER SHALL BE REMOVED.

(PADEP EROSION and SEDIMENT POLLUTION CONTROL PROGRAM MANUAL – MARCH 2012)
(STANDARD CONSTRUCTION DETAIL #7–9)

SEDIMENT BASIN/DETENTION BASIN RISER STRUCTURES

Not to Scale

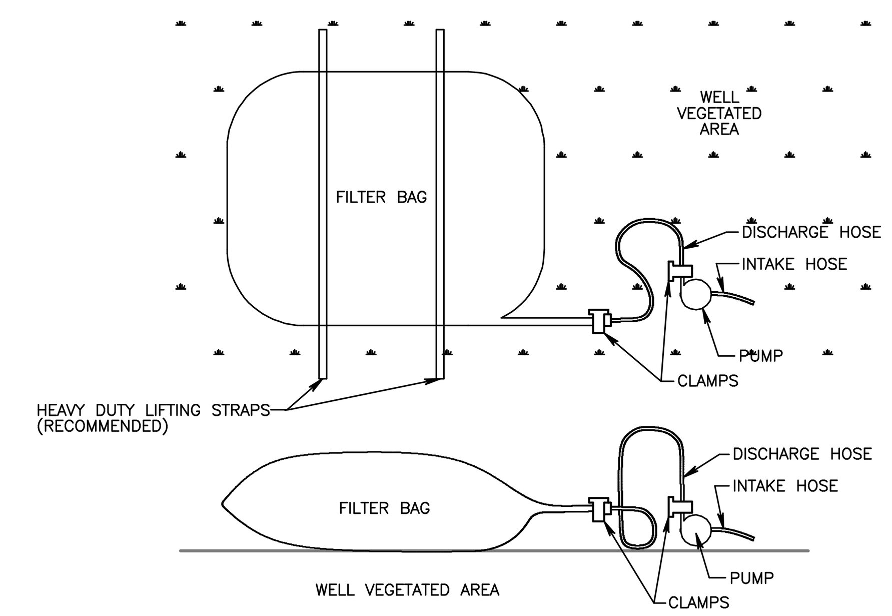

LOW VOLUME FILTER BAGS SHALL BE MADE FROM NON–WOVEN GEOTEXTILE MATERIAL SEWN WITH HIGH STRENGTH, DOUBLE STITCHED "J" TYPE SEAMS. THEY SHALL BE CAPABLE OF TRAPPING PARTICLES LARGER THEN 150 MICRONS. HIGH VOLUME FILTER BAGS SHALL BE MADE FROM WOVEN GEOTEXTILES THAT MEET THE FOLLOWING STANDARDS:

PROPERTY:	TEST METHOD:	MINIMUM STANDARD:
AVG. WIDE WIDTH STRENGTH	ASTM D–4884	60 lb/in
GRAB TENSILE	ASTM D–4632	205 lb
PUNCTURE	ASTM D–4833	110 lb
MULLEN BURST	ASTM D–3786	350 psi
UV RESISTANCE	ASTM D–4355	70%
AOS % RETAINED	ASTM D–4751	80 Sieve

A SUITABLE MEANS OF ACCESSING THE BAG WITH MACHINERY REQUIRED FOR DISPOSAL PURPOSES SHALL BE PROVIDED. FILTER BAGS SHALL BE REPLACED WHEN THEY BECOME 1/2 FULL OF SEDIMENT. SPARE BAGS SHALL BE KEPT AVAILABLE FOR REPLACEMENT OF THOSE THAT HAVE FAILED OR ARE FILLED. BAGS SHALL BE PLACED ON STRAPS TO FACILITATE REMOVAL UNLESS BAGS COME WITH LIFTING STRAPS ALREADY ATTACHED.

BAGS SHALL BE LOCATED IN WELL–VEGETATED (GRASSY) AREA, AND DISCHARGE ONTO STABLE, EROSION RESISTANT AREAS. WHERE THIS IS NOT POSSIBLE, A GEOTEXTILE UNDERLAYMENT AND FLOW PATH SHALL BE PROVIDED. BAGS MAY BE PLACED ON FILTER STONE TO INCREASE DISCHARGE CAPACITY. BAGS SHALL NOT BE PLACED ON SLOPES GREATER THAN 5%. FOR SLOPES EXCEEDING 5%, CLEAN ROCK OR OTHER NON–ERODIBLE AND NON–POLLUTING MATERIAL MAY BE PLACED UNDER THE BAG TO REDUCE SLOPE STEEPNESS.

NO DOWNSLOPE SEDIMENT BARRIER IS REQUIRED FOR MOST INSTALLATIONS. COMPOST BERM OR COMPOST FILTER SOCK SHALL BE INSTALLED BELOW BAGS LOCATED IN HQ OR EV WATERSHEDS, WITHIN 50 FEET OF ANY RECEIVING SURFACE WATER OR WHERE GRASSY AREA IS NOT AVAILABLE.

THE PUMP DISCHARGE HOSE SHALL BE INSERTED INTO THE BAGS IN THE MANNER SPECIFIED BY THE MANUFACTURER AND SECURELY CLAMPED. A PIECE OF PVC PIPE IS RECOMMENDED FOR THIS PURPOSE.

THE PUMPING RATE SHALL BE NO GREATER THAN 750 GPM OR 1/2 THE MAXIMUM SPECIFIED BY THE MANUFACTURER, WHICHEVER IS LESS. PUMP INTAKES SHALL BE FLOATING AND SCREENED.

FILTER BAGS SHALL BE INSPECTED DAILY. IF ANY PROBLEM IS DETECTED, PUMPING SHALL CEASE IMMEDIATELY AND NOT RESUME UNTIL THE PROBLEM IS CORRECTED.

(PADEP EROSION and SEDIMENT POLLUTION CONTROL PROGRAM MANUAL – MARCH 2012)
(STANDARD CONSTRUCTION DETAIL #3–16)

SEDIMENT FILTER BAG FOR PUMPED WATER

Not To Scale

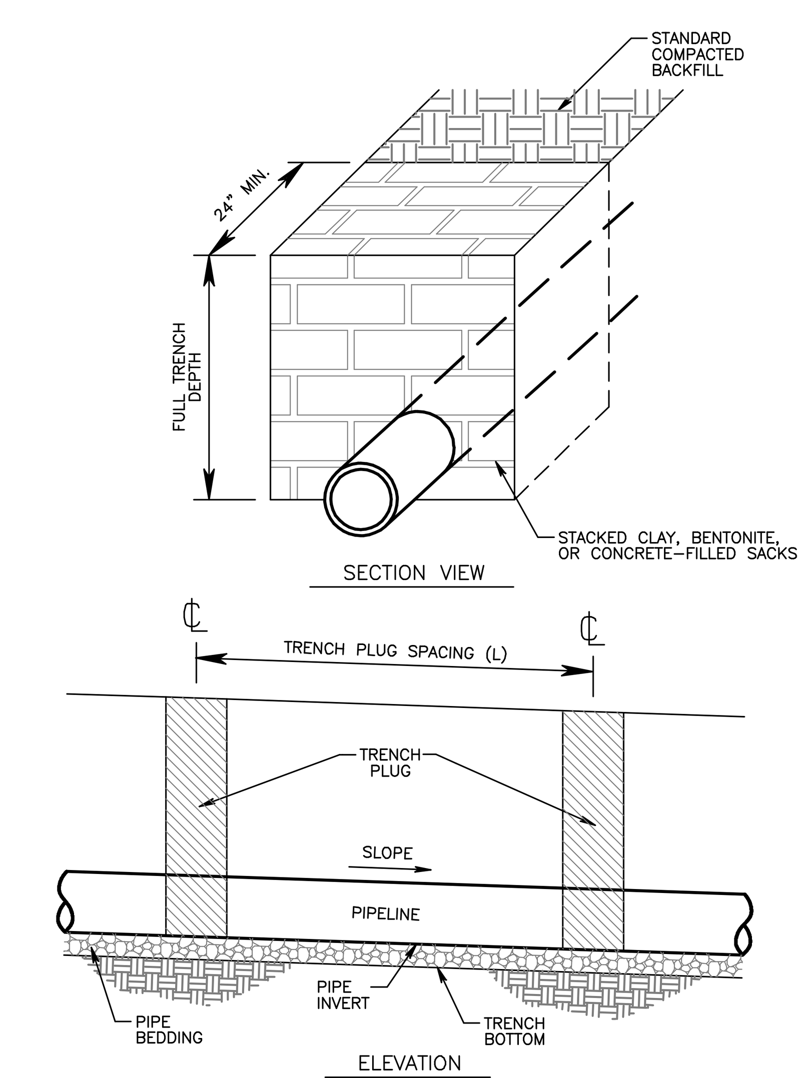

TABLE 13.1
MAXIMUM SPACING and MATERIALS for TRENCH PLUGS

TRENCH SLOPE (%)	SPACING L (ft.)	PLUG MATERIAL
<5	1,000	* CLAY, BENTONITE, OR CONCRETE FILLED SACKS
5 – 15	500	* CLAY, BENTONITE, OR CONCRETE FILLED SACKS
15 – 25	300	* CLAY, BENTONITE, OR CONCRETE FILLED SACKS
25 – 35	200	* CLAY, BENTONITE, OR CONCRETE FILLED SACKS
35 – 100	100	* CLAY, BENTONITE, OR CONCRETE FILLED SACKS
>100	50	CEMENT FILLED BAGS (WETTED) or MORTARED STONE

* TOPSOIL MAY NOT BE USED TO FILL SACKS.

IMPERVIOUS TRENCH PLUGS ARE REQUIRED FOR ALL STREAM, RIVER, WETLAND, OR OTHER WATER BODY CROSSING.

(PADEP EROSION and SEDIMENT POLLUTION CONTROL PROGRAM MANUAL – MARCH 2012)
(STANDARD CONSTRUCTION DETAIL #13–4)

TYPICAL TRENCH PLUG INSTALLATION

Not to Scale

No.:	DATE:	DESCRIPTION:

REVISIONS

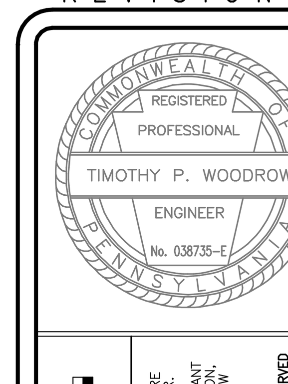

0'

ONLY PLANS INCORPORATING A RAISED PROFESSIONAL SEAL ARE CONSIDERED TO BE OFFICIAL AND RELIED UPON BY THE USER.

THIS PLAN HAS BEEN PREPARED SPECIFICALLY FOR THE APPLICANT AND PROJECT DESIGNATED HEREON. ANY MODIFICATION, REVISION, DUPLICATION OR USE WITHOUT WRITTEN CONSENT OF WOODROW & ASSOCIATES, INC. IS PROHIBITED BY LAW.

© COPYRIGHT 2015 WOODROW & ASSOCIATES, INC. – ALL RIGHTS RESERVED

Parcel Information:
TP 63–00–01108–008
Block 1 Unit 7
Deed Bk: 5658
Pg: 2573
Gross Tract:
55.5618 Acres

Record Owner:
DORIS Y &
RONALD W MARKLEY
REVOCABLE TRUST
2325 Chestnut Avenue
Norristown, PA 19403

Applicant:
MikeLen, LLC
Attn: Len DelGrippo
2965 W. Germantown Pike
Norristown, PA 19403

PRELIMINARY PLAN (Not To Be Recorded)

EROSION & SEDIMENTATION CONTROL SPECIFICATIONS A
MARKLEY FARM PROPERTY

WEST NORRITON TOWNSHIP – MONTGOMERY COUNTY – PENNSYLVANIA

WOODROW & ASSOCIATES, INC.
MUNICIPAL / CIVIL CONSULTING ENGINEERS
1108 North Bethlehem Pike / Suite 5 – Lower Gwynedd – PA 19002
Phone: (215) 542–5648 Fax: (215) 542–5679
Web: www.WoodrowInc.com

Layer List: Sht31_E&S–Specs1
Plan Date: NOV 06, 2015
Job No: 11–0410 D
Design Mgr: J.H.K.
Proj. Mgr: T.P.W.
Sheet No: 31 of 34

Project No: 11–0410 D Project Name: MARKLEY FARM PROPERTY Print Date: Nov 2, 2015 (14:43)

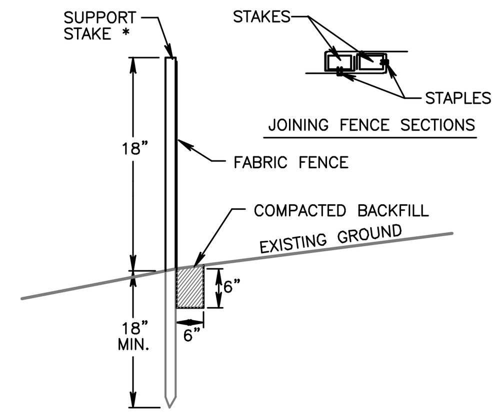

* STAKES SPACED @ 8' MAX. USE 2"x2" WOOD OR EQUIVALENT STEEL (U OR T) STAKES.

FABRIC SHALL HAVE THE MINIMUM PROPERTIES AS SHOWN IN TABLE 4.3.

FABRIC WIDTH SHALL BE 30" MINIMUM. STAKES SHALL BE HARDWOOD OR EQUIVALENT STEEL (U OR T) STAKES.

SILT FENCE SHALL BE PLACED AT LEVEL EXISTING GRADE. BOTH ENDS OF THE FENCE SHALL BE EXTENDED AT LEAST 8 FEET UPSLOPE AT 45 DEGREES TO THE MAIN FENCE ALIGNMENT (SEE FIGURE 4.1).

SEDIMENT SHALL BE REMOVED WHEN ACCUMULATIONS REACH HALF THE ABOVEGROUND HEIGHT OF THE FENCE.

ANY SECTION OF SILT FENCE WHICH HAS BEEN UNDERMINED OR TOPPED SHALL BE IMMEDIATELY REPLACED WITH A ROCK FILTER OUTLET (STANDARD CONSTRUCTION DETAIL #4-6).

FENCE SHALL BE REMOVED AND PROPERLY DISPOSED OF WHEN TRIBUTARY AREA IS PERMANENTLY STABILIZED.

(PADEP EROSION and SEDIMENT POLLUTION CONTROL PROGRAM MANUAL – MARCH 2012)
(STANDARD CONSTRUCTION DETAIL #4-7)

STANDARD FILTER FABRIC FENCE (18" High)

Not to Scale

MAXIMUM SLOPE LENGTHS FOR FILTER FABRIC FENCE

(PADEP EROSION and SEDIMENT POLLUTION CONTROL PROGRAM MANUAL – MARCH 2012)
(TABLE 4.4)

SLOPE – PERCENT	MAXIMUM SLOPE LENGTH (FT) ABOVE FENCE 18" HIGH FENCE	30" HIGH FENCE*	SUPER SILT FENCE
2 (OR LESS)	150	500	1,000
5	100	250	500
10	50	150	300
15	35	100	
20	25	70	200
25	20	55	
30	15	45	100
35	15	40	
40	15	35	75
45	10	30	
50	10	25	50

* Reinforced 30" high fence.

FABRIC PROPERTIES FOR SILT FENCE

(PADEP EROSION and SEDIMENT POLLUTION CONTROL PROGRAM MANUAL – MARCH 2012)
(TABLE 4.3)

FABRIC PROPERTY:	MINIMUM ACCEPTABLE VALUE:	TEST METHOD:
GRAB TENSILE STRENGTH (lb)	120	ASTM D1682
ELONGATION AT FAILURE (%)	20% MAX.	ASTM D1682
MULLEN BURST STRENGTH (psi)	200	ASTM D3786
TRAPEZOIDAL TEAR STRENGTH (lb)	50	
PUNCTURE STRENGTH (lb)	40	ASTM D751 (modified)
SLURRY FLOW RATE (gal/min/sf)	0.3	ASTM 5141
EQUIVALENT OPENING SIZE	30	US Std. Sieve CW-02215
ULTRAVIOLET RADIATION STABILITY (%)	80	ASTM G-26

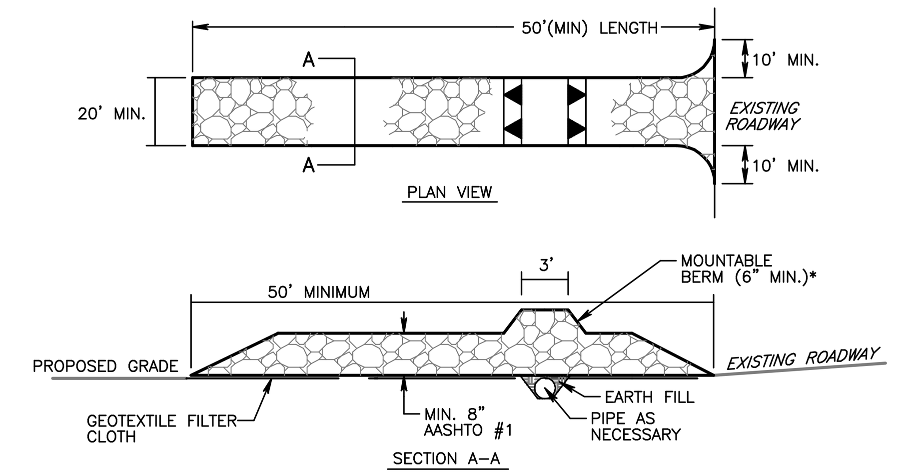

* MOUNTABLE BERM USED TO PROVIDE PROPER COVER FOR PIPE

REMOVE TOPSOIL PRIOR TO INSTALLATION OF ROCK CONSTRUCTION ENTRANCE. EXTEND ROCK OVER FULL WIDTH OF ENTRANCE.

RUNOFF SHALL BE DIVERTED FROM ROADWAY TO A SUITABLE SEDIMENT REMOVAL BMP PRIOR TO ENTERING ROCK CONSTRUCTION ENTRANCE.

MOUNTABLE BERM SHALL BE INSTALLED WHEREVER OPTIONAL CULVERT PIPE IS USED AND PROPER PIPE COVER AS SPECIFIED BY MANUFACTURER IS NOT OTHERWISE PROVIDED. PIPE SHALL BE SIZED APPROPRIATELY FOR SIZE OF DITCH BEING CROSSED.

MAINTENANCE:
ROCK CONSTRUCTION ENTRANCE THICKNESS SHALL BE CONSTANTLY MAINTAINED TO THE SPECIFIED DIMENSIONS BY ADDING ROCK. A STOCKPILE SHALL BE MAINTAINED ON SITE FOR THIS PURPOSE. ALL SEDIMENT DEPOSITED ON PAVED ROADWAYS SHALL BE REMOVED AND RETURNED TO THE CONSTRUCTION SITE IMMEDIATELY. IF EXCESSIVE AMOUNTS OF SEDIMENT ARE BEING DEPOSITED ON ROADWAY, EXTEND LENGTH OF ROCK CONSTRUCTION ENTRANCE BY 50 FOOT INCREMENTS UNTIL CONDITION IS ALLEVIATED OR INSTALL WASH RACK. WASHING THE ROADWAY OR SWEEPING THE DEPOSITS INTO ROADWAY DITCHES, SEWERS, CULVERTS, OR OTHER DRAINAGE COURSES IS NOT ACCEPTABLE.

(PADEP EROSION and SEDIMENT POLLUTION CONTROL PROGRAM MANUAL – MARCH 2012)
(STANDARD CONSTRUCTION DETAIL #3-1)

ROCK CONSTRUCTION ENTRANCE

Not To Scale

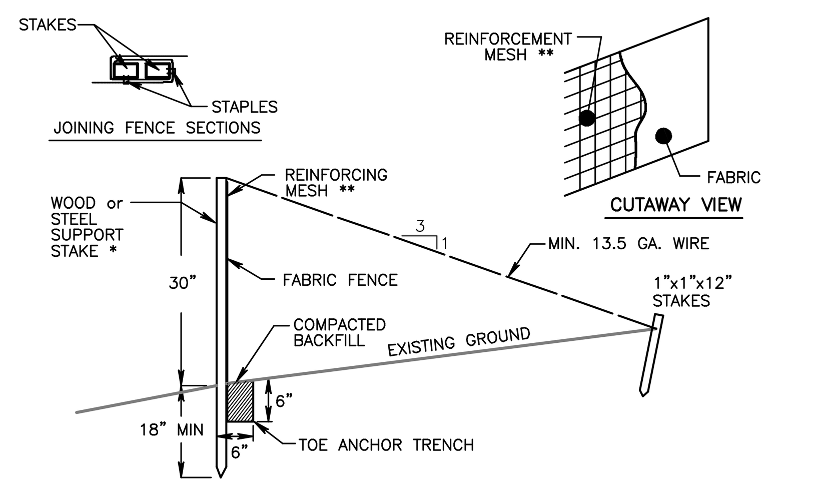

** MESH: EITHER INDUSTRIAL POLYPROPOLENE OR STEEL MESH w/6" MAX OPENING. STEEL MESH SHALL BE 14 ga. MIN.

* STAKES SPACED @ 8' MAX. USE 2"x2" WOOD OR EQUIVALENT STEEL (U OR T) STAKES.

FABRIC SHALL HAVE THE MINIMUM PROPERTIES AS SHOWN IN TABLE 4.3.

FABRIC WIDTH SHALL BE 42" MINIMUM. STAKES SHALL BE HARDWOOD OR EQUIVALENT STEEL (U OR T) STAKES. AN 18" SUPPORT STAKE SHALL BE DRIVEN 12" MINIMUM INTO UNDISTURBED GROUND.

SILT FENCE SHALL BE INSTALLED AT EXISTING LEVEL GRADE. BOTH ENDS OF EACH FENCE SECTION SHALL BE EXTENDED AT LEAST 8 FEET UPSLOPE AT 45 DEGREES TO THE MAIN FENCE ALIGNMENT (FIGURE 4.1).

SEDIMENT SHALL BE REMOVED WHERE ACCUMULATIONS REACH HALF THE ABOVEGROUND HEIGHT OF THE FENCE.

ANY SECTION OF SILT FENCE WHICH HAS BEEN UNDERMINED OR TOPPED SHALL BE IMMEDIATELY REPLACED WITH A ROCK FILTER OUTLET (STANDARD CONSTRUCTION DETAIL #4-6).

FENCE SHALL BE REMOVED AND PROPERLY DISPOSED OF WHEN TRIBUTARY AREA IS PERMANENTLY STABILIZED.

(PADEP EROSION and SEDIMENT POLLUTION CONTROL PROGRAM MANUAL – MARCH 2012)
(STANDARD CONSTRUCTION DETAIL #4-8)

REINFORCED FILTER FABRIC FENCE (30" High)

Not to Scale

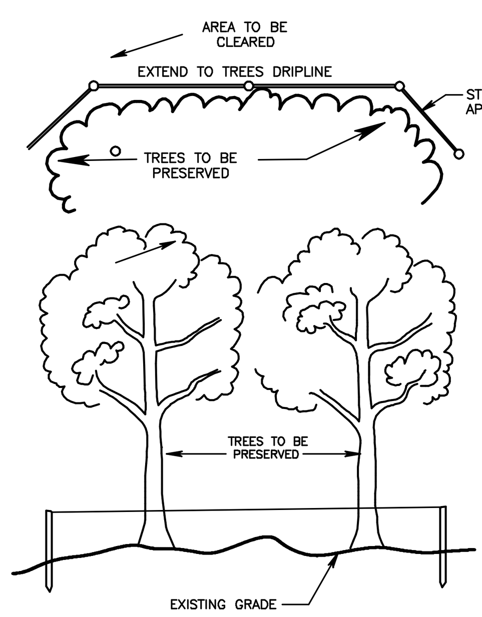

1. TREE PROTECTION TO PROTECT TRUNK, BRANCHES AND ROOT SYSTEM.
2. TREE PROTECTION IS TO BE IN PLACE PRIOR TO ANY CONSTRUCTION IN THE VICINITY.
3. MAINTAIN FENCING IN VERTICAL POSITION AT ALL TIMES.
4. FENCING SHALL NOT BE NAILED TO ANY TREES OR SHRUBS.
5. FABRIC SHALL BE WOODEN SNOW FENCE, 4 FT. MIN. HEIGHT SAFETY OR APPROVED EQUAL MOUNTED ON STEEL POSTS LOCATED 8 FT. ON CENTER.
6. FENCING SHALL BE REMOVED FOLLOWING COMPLETE STABILIZATION OF THE AREA.
7. GRADE CHANGES AND EXCAVATIONS SHALL NOT ENCROACH UPON THE TREE PROTECTION AREA.
8. NO TOXIC MATERIALS SHALL BE STORED WITHIN 100 FT. OF A TREE PROTECTION AREA, INCLUDING PETROLEUM BASED AND/OR DERIVED PRODUCTS.
9. TREES SHALL NOT BE USED FOR ROPING, CABLES, SIGNS OR FENCING. NAILS AND SPIKES SHALL NOT BE DRIVEN INTO ANY TREES.

TREE PROTECTION FENCING DETAIL

Not To Scale

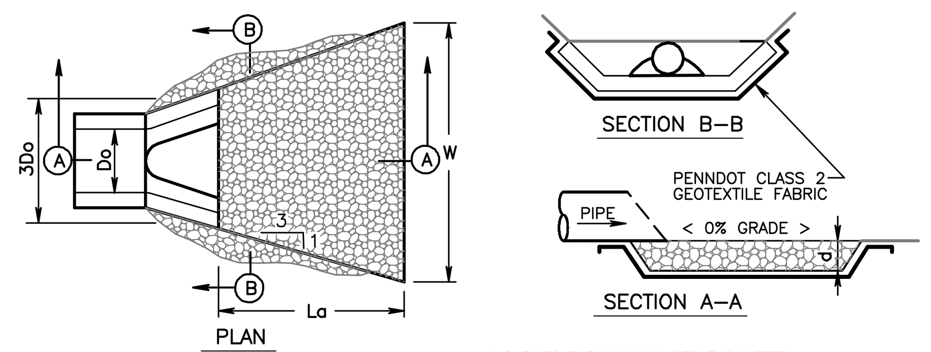

d = 1.5 TIMES THE MAXIMUM STONE DIAMETER BUT NOT LESS THAN 6 INCHES.

ENERGY DISSIPATOR SIZING DATA							
Outlet Structure No.	Pipe Dia. Do (in)	Tailwater Condition (Max or Min)	Q (CFS)	V* (FPS)	Riprap Size	La (ft)	W (ft)
ST-29							
ST-34							
ST-44							
ST-47							
ST-70							
ST-84							
ST-86							
ST-89							

(INSPECT ON A WEEKLY BASIS AND AFTER EACH RUNOFF EVENT DURING CONSTRUCTION ACTIVITIES)

ALL APRONS SHALL BE CONSTRUCTED TO THE DIMENSIONS SHOWN. TERMINAL WIDTHS SHALL BE ADJUSTED AS NECESSARY TO MATCH RECEIVING CHANNELS.

ALL APRONS SHALL BE INSPECTED AT LEAST WEEKLY AND AFTER EACH RUNOFF EVENT. DISPLACED RIPRAP WITHIN THE APRON SHALL BE REPLACED IMMEDIATELY.

EXTEND RIPRAP ON BACK SIDE OF APRON TO AT LEAST 1/2 DEPTH OF PIPE ON BOTH SIDES TO PREVENT SCOUR AROUND THE PIPE.

(PADEP EROSION and SEDIMENT POLLUTION CONTROL PROGRAM MANUAL – MARCH 2012)
(STANDARD CONSTRUCTION DETAIL #9-2)

RIPRAP APRON AT PIPE OUTLET

Not to Scale

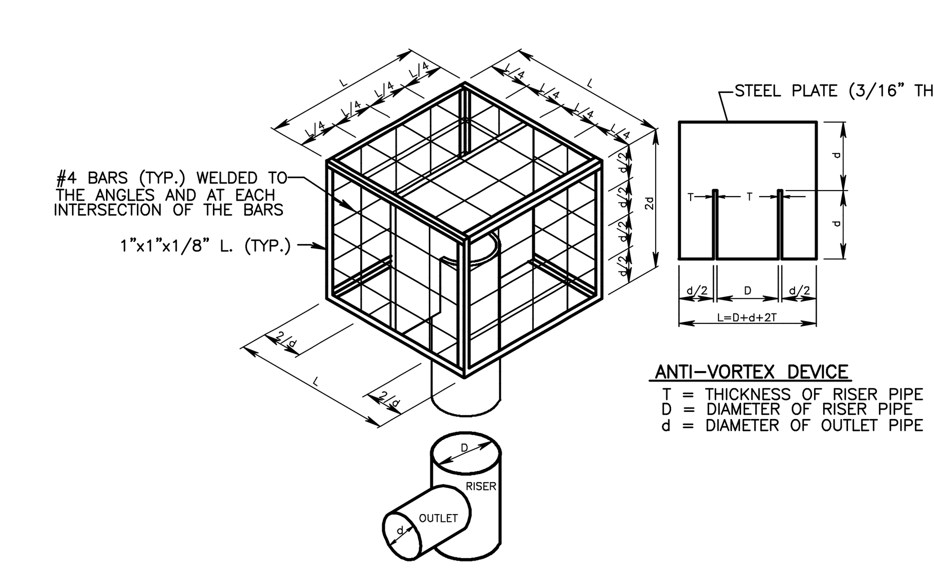

(PADEP EROSION and SEDIMENT POLLUTION CONTROL PROGRAM MANUAL – MARCH 2012)
(STANDARD CONSTRUCTION DETAIL #7-5)

TRASH RACK AND ANTI-VORTEX DEVICE

Not To Scale

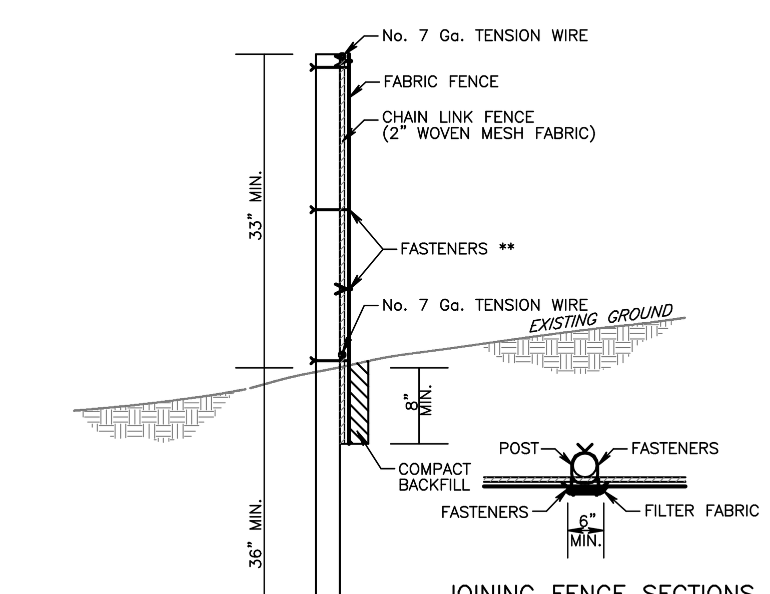

* POST SPACED @ 10' MAX. USE 2 1/2" DIA. GALVANIZED OR ALUMINUM POSTS.

** CHAIN LINK TO POST FASTENERS SPACED @ 14" MAX. USE No. 9 Ga. GALVANIZED STEEL PRE-FORMED CLIPS. CHAIN LINK TENSION WIRE FASTENERS SPACED @ 60" MAX. USE NO. 13.5 Ga. GALVANIZED STEEL WIRE. FABRIC TO CHAIN FASTENERS SPACED @ 24" MAX CENTER TO CENTER.

FABRIC SHALL HAVE THE MINIMUM PROPERTIES AS SHOWN IN TABLE 4.3.

FILTER FABRIC WIDTH SHALL BE 42" MINIMUM.

POSTS SHALL BE INSTALLED USING A POSTHOLE DRILL.

CHAIN LINK SHALL BE GALVANIZED No. 11.5 Ga. STEEL WIRE WITH 2-1/4" OPENING, No. 11 Ga. ALUMINUM COATED STEEL WIRE IN ACCORDANCE WITH ASTM-A-491, OR GALVANIZED No. 9 Ga. STEEL WIRE TOP AND BOTTOM WITH GALVANIZED No. 11 Ga. STEEL INTERMEDIATE WIRES. No. 7 Ga. TENSION WIRE TO BE INSTALLED HORIZONTALLY THROUGH HOLES AT TOP AND BOTTOM OF CHAIN-LINK FENCE OR ATTACHED WITH HOG RINGS AT 5' (MAX) CENTERS.

SILT FENCE SHALL BE PLACED AT EXISTING LEVEL GRADE. BOTH ENDS OF THE FENCE SHALL BE EXTENDED AT LEAST 8 FEET UPSLOPE AT 45 DEGREES TO MAIN BARRIER ALIGNMENT (FIGURE 4.1).

SEDIMENT SHALL BE REMOVED WHEN ACCUMULATIONS REACH HALF THE ABOVEGROUND HEIGHT OF THE FENCE.

FENCE SHALL BE REMOVED AND PROPERLY DISPOSED OF WHEN TRIBUTARY AREA IS PERMANENTLY STABILIZED.

(PADEP EROSION and SEDIMENT POLLUTION CONTROL PROGRAM MANUAL – MARCH 2012)
(STANDARD CONSTRUCTION DETAIL #4-10)

SUPER FILTER FABRIC FENCE

Not To Scale

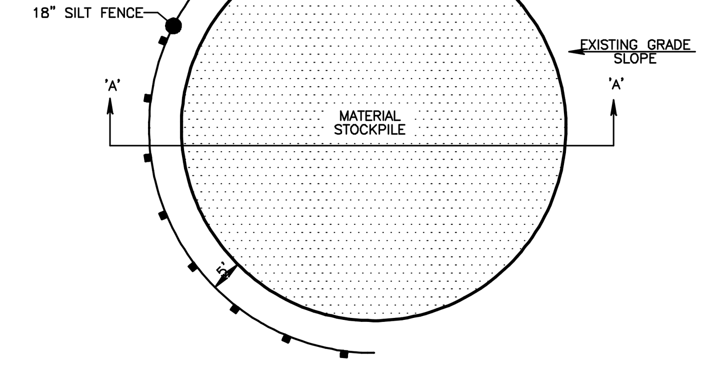

PLAN VIEW

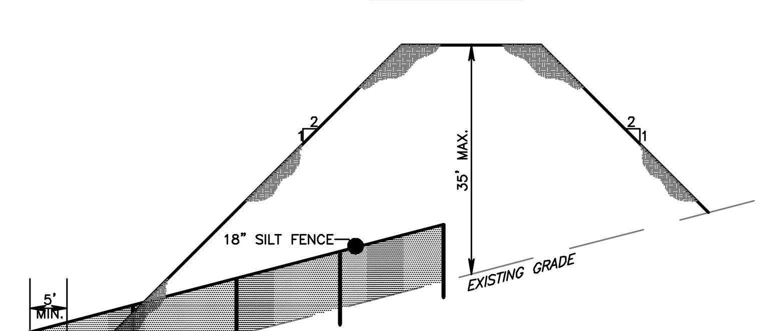

CROSS SECTION VIEW

NOTES:

STOCKPILE HEIGHTS MUST NOT EXCEED 35 FEET.

SIDE SLOPES MUST BE NO GREATER THEN 2:1. 2 FEET HORIZONTALLY TO ONE FOOT VERTICALLY.

18" SILT FENCE SHALL BE INSTALLED ON THE DOWN SLOPE SIDE OF THE PROPOSED BERM AT A MINIMUM OF 5 FEET FROM THE TOE OF SLOPE.

SHOULD THE NEED ARISE WHERE ADDITIONAL STOCKPILE AREAS ARE REQUIRED THOSE AREAS MUST BE APPROVED BY THE MONTGOMERY COUNTY CONSERVATION DISTRICT.

STOCKPILE AREA MUST BE SEEDED AND MULCHED IMMEDIATELY AFTER THE PLACEMENT OF ANY STOCKPILE MATERIAL.

TEMPORARY STOCKPILE AREA DETAIL

Not To Scale

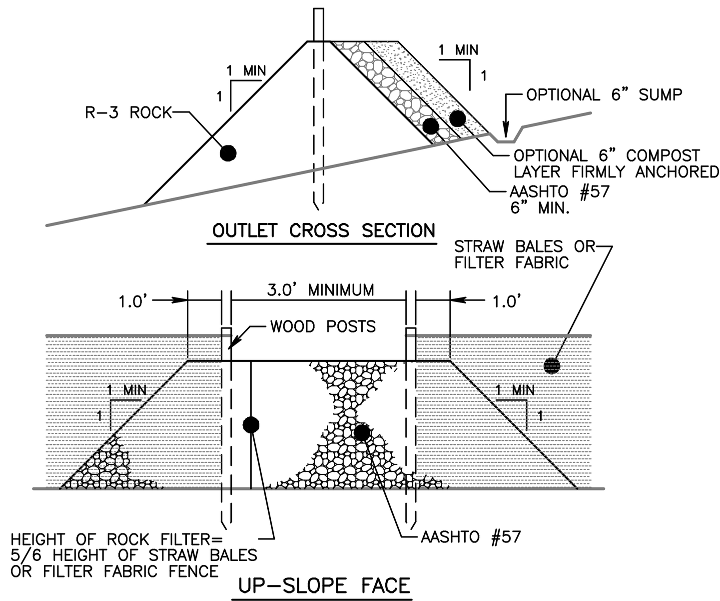

A ROCK FILTER OUTLET SHALL BE INSTALLED WHERE FAILURE OF A SILT FENCE OR STRAW BALE BARRIER HAS OCCURED DUE TO CONCENTRATED FLOW. ANCHORED COMPOST LAYER SHALL BE USED ON UPSLOPE FACE IN HQ AND EV WATERSHEDS.

SEDIMENT SHALL BE REMOVED WHEN ACCUMULATIONS REACH 1/3 THE HEIGHT OF THE OUTLET.

(PADEP EROSION and SEDIMENT POLLUTION CONTROL PROGRAM MANUAL – MARCH 2012)
(STANDARD CONSTRUCTION DETAIL #4-6)

ROCK FILTER OUTLET DETAIL

Not To Scale

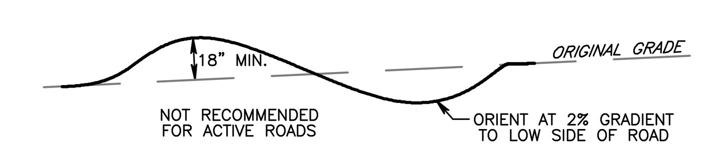

* Adapted from USDA Forest Service

WATERBARS SHALL DISCHARGE TO A STABLE AREA.

WATERBARS SHALL BE INSPECTED WEEKLY (DAILY ON ACTIVE ROADS) AND AFTER EACH RUNOFF EVENT. DAMAGED OR ERODED WATERBARS SHALL BE RESTORED TO ORIGINAL DIMENSIONS WITHIN 24 HOURS OF INSPECTION.

MAINTENANCE OF WATERBARS SHALL BE PROVIDED UNTIL ROADWAY, SKIDTRAIL, OR RIGHT-OF-WAY HAS ACHIEVED PERMANENT STABILIZATION.

WATERBARS ON RETIRED ROADWAYS, SKIDTRAILS, AND RIGHT-OF-WAYS SHALL BE LEFT IN PLACE AFTER PERMANENT STABILIZATION HAS BEEN ACHIEVED.

TABLE 3.1
MAXIMUM WATERBAR SPACING

PERCENT SLOPE	SPACING (Ft.)
< 5	250
5 – 15	150
15 – 30	100
> 30	50

(PADEP EROSION and SEDIMENT POLLUTION CONTROL PROGRAM MANUAL – MARCH 2012)
(STANDARD CONSTRUCTION DETAIL #3-5)

WATERBAR

Not to Scale

No.:	DATE:	DESCRIPTION:

REVISIONS

COMMONWEALTH OF PENNSYLVANIA REGISTERED PROFESSIONAL TIMOTHY P. WOODROW ENGINEER No. 038735-E

0'

ONLY PLANS INCORPORATING A RAISED PROFESSIONAL SEAL ARE CONSIDERED TO BE OFFICIAL AND RELIED UPON BY THE USER.

THIS PLAN HAS BEEN PREPARED SPECIFICALLY FOR THE APPLICANT AND PROJECT DESIGNATED HEREON. ANY MODIFICATION, REVISION, DUPLICATION OR USE WITHOUT WRITTEN CONSENT OF WOODROW & ASSOCIATES, INC. IS PROHIBITED BY LAW.

© COPYRIGHT 2015 WOODROW & ASSOCIATES, INC. – ALL RIGHTS RESERVED

Parcel Information:
TP 63-00-01108-008
Block 1 Unit 7
Deed Bk: 5658
Pg: 2573
Gross Tract:
55.5618 Acres

Record Owner:
DORIS Y &
RONALD W MARKLEY
REVOCABLE TRUST
2325 Chestnut Avenue
Norristown, PA 19403

Applicant:
MikeLen, LLC
Attn: Len DelGrippo
2965 W. Germantown Pike
Norristown, PA 19403

PRELIMINARY PLAN (Not To Be Recorded)

EROSION & SEDIMENTATION CONTROL SPECIFICATIONS B
MARKLEY FARM PROPERTY

WEST NORRITON TOWNSHIP – MONTGOMERY COUNTY – PENNSYLVANIA

WOODROW & ASSOCIATES, INC.
MUNICIPAL / CIVIL CONSULTING ENGINEERS
1108 North Bethlehem Pike / Suite 5 – Lower Gwynedd – PA 19002
Phone: (215) 542-5648 Fax: (215) 542-5679
Web: www.WoodrowInc.com

Layer List: Sht32_E&S-Specs2
Plan Date: NOV 06, 2015
Job No: 11-0410 D
Design Mgr: J.H.K.
Proj. Mgr: T.P.W.
Sheet No: 32 of 34

Project No: 11-0410 D Project Name: MARKLEY FARM PROPERTY Print Date: Nov 2, 2015 (14:41)

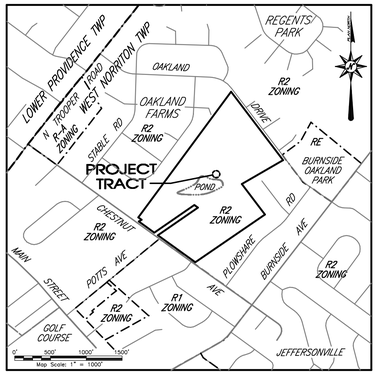

LOCATION MAP

GENERAL NOTES

Post Construction Notes:

1. Sediment laden runoff is an anticipated construction waste.
2. The shown BMPs are proposed to minimize and mitigate any potential thermal impacts to surface runoff generated by an increase in impervious cover.
3. Proposed impervious has been minimized to the greatest extent possible.
4. Existing drainage features have been maintained and existing vegetation preserved where possible.
5. Land clearing and soil compaction has been minimized to the greatest extent possible.
6. The proposed BMPs shall minimally change the direction and flowrate of onsite runoff.
7. Runoff from the project site enters Indian Creek. Indian Creek is classified by Title 25 Environmental Resources Chapter 93 as TSF & MF.

Sediment Disposal:

8. Silt removed from permanent BMPs shall be disposed of on-site in landscaped areas located outside the 100 year flood plains, wetlands, steep slopes and drainage swales. Areas of sediment disposal shall be considered a critical vegetation area requiring immediate stabilization.
9. All BMP shown require inspection weekly and after each runoff event. All required repairs and or replacement of BMP's must be done immediately.

Recycling and Disposal Methods:

10. The operator shall remove from this site, recycle, or dispose of all building materials and wastes in accordance with the Department's Solid Waste Management Regulations at 25 Pa. Code 260.1 et seq., 271.1 et seq. The contractor shall not illegally bury, dump, or discharge any building material or wastes at this site.

B.M.P. MAINTENANCE PROGRAM

GENERAL NOTES:

The stormwater detention facility shown hereon is a permanent B.M.P. structure and is not to be removed, altered or reconfigured in any way without the approval of the applicable municipality and/or the local County Conservation District and D.E.P.

All B.M.P.'s such as this basin and conveyance system require yearly inspection and maintenance to ensure the B.M.P.'s are functioning as designed. Maintenance of the system will include the removal of any debris and flushing of the system. An inspection report should be provided by a creditable Engineering firm under the direction of a Licensed Engineer. The owners, their successors, or its assigns, shall assume all responsibilty for the cost associated with the inspection, cleaning of the system, engineering fees and ultimately any costs associated with recommended repairs, and/or replacement of said facilities. Copies of the inspection report shall be forwarded to the applicable municipality for review and record in keeping with State regulations.

MAINTENANCE NOTES & SCHEDULE:

1. Maintenance of the Bio-filtration areas: (Semi-annually)

   Mow bio-filter planting twice a year. Once a year mowing is sufficient to keep a meadow from reverting to woodland, but may not be sufficient to discourage woody seedlings, brambles, invasive vines and multiflora rose. Mowing more than twice a year will only encourage cool season grass species and create additional turf areas. Recommended dates for mowing are early July for the first cutting and a second cutting in March up to April 15th. This will maximize bird and animal habitat and promote desirable and attractive vegetation. Mow bio-filter areas when the ground is dry and at a height of 6"–8" during the dormant season. Monitor bio-filter for intrusion by invasive plants such as thistle. Eliminate invasives by spot mowing, spot spraying, or wick application of appropriate herbicide, or manual or mechanical pulling. A combination of strategies may be the best approach. Do not use herbicides within 50 feet or streams.

2. Maintenance of the Basin Outlet Structures: (After each runoff event)

   The owner, its assigns shall be responsible to ensure that the basin outlet structure is free and clear of any debris that would impede outfall from the basin. The outlet structure shall be inspected after each runoff event and cleaned as required.

3. Maintenance of the storm sewer collection system: (After each runoff event)

   The owner, its assigns shall be responsible to ensure that the storm sewer collection and lawn drain system is free and clear of any debris. The system shall be inspected after each runoff event and cleaned if required.

4. Maintenance of the downspout & roof leader collection system: (Quarterly)

   The owner, its assigns shall be responsible to ensure that the downspout and roof leader collection system is free and clear of any debris. The system shall be inspected after each runoff event and cleaned if required. Quarterly flushing of the system shall be done to ensure the system is free and clear of any sediment and debris.

ACKNOWLEDGEMENT:

The landowner agrees to all above requirements on this___day of_____, 20__.

_____
Property Owner Signature

_____
Attest

PLAN FEATURES LEGEND

- Tract Boundary Line
- Legal Right-of-Way Line
- Existing Roadway Centerline
- Mapped Wetlands Limits
- Supplemental Contour (2' Interval)
- Index Contour (10' Interval)
- Existing Soil Series Limits
- Existing Drive / Paving Limit
- Existing Vegetation Limit
- Existing Storm Sewer Piping
- Existing Sanitary Sewer Piping
- Existing Gas Main
- Existing Water Main / Service
- Existing Overhead Utility Wires
- Existing Underground Telephone
- Existing Fence Line

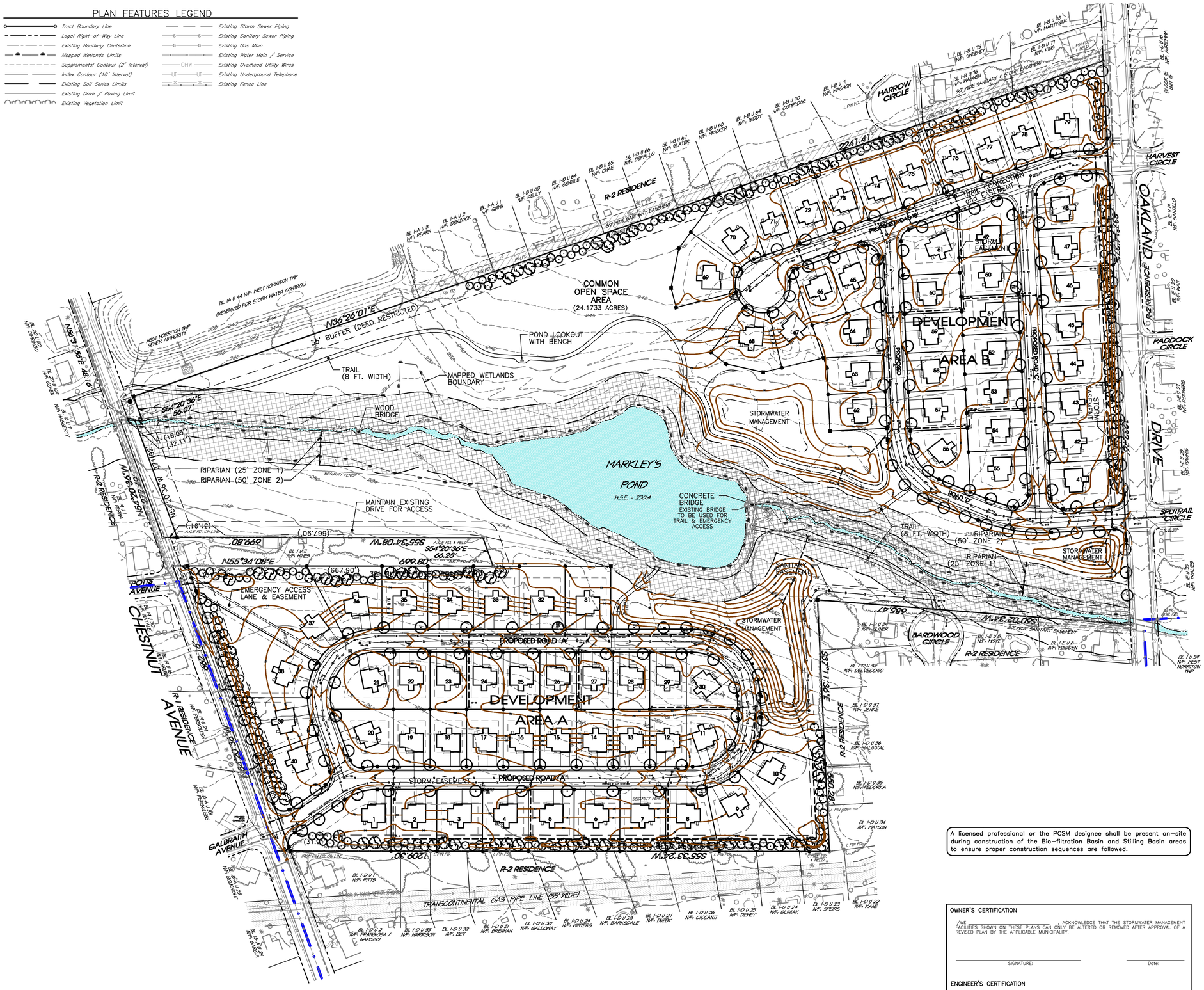

A licensed professional or the PCSM designee shall be present on-site during construction of the Bio-filtration Basin and Stilling Basin areas to ensure proper construction sequences are followed.

OWNER'S CERTIFICATION

I/WE _____ ACKNOWLEDGE THAT THE STORMWATER MANAGEMENT FACILITIES SHOWN ON THESE PLANS CAN ONLY BE ALTERED OR REMOVED AFTER APPROVAL OF A REVISED PLAN BY THE APPLICABLE MUNICIPALITY.

SIGNATURE: _____ Date: _____

ENGINEER'S CERTIFICATION

I, Timothy P. Woodrow, ON THIS DATE _____ OF 20__, HAVE REVIEWED AND HEREBY CERTIFY THAT THE DRAINAGE PLAN MEETS ALL DESIGN STANDARDS AND CRITERIA OF THE APPLICABLE MUNICIPALITY'S STORMWATER MANAGEMENT ORDINANCE.

SIGNATURE: _____ 038735-E LIC. No.:

No.:	DATE:	DESCRIPTION:

REVISIONS

COMMONWEALTH OF PENNSYLVANIA REGISTERED PROFESSIONAL KEVIN R. GIBBONS LAND SURVEYOR No. 044550-E

SCALE IN FEET (1" = 100'-0")

© COPYRIGHT 2015 WOODROW & ASSOCIATES, INC. – ALL RIGHTS RESERVED

Parcel Information: TP 63-00-01108-008 Block – Unit 7 Deed Bk: 5658 Pg: 2573

Gross Tract: 55.5618 Acres

Record Owner: DORIS Y & RONALD W MARKLEY REVOCABLE TRUST 2900 Germantown Pike Norristown, PA 19403

Applicant: MikeLen, LLC Attn: Len DeGrigoro 2900 Germantown Pike Norristown, PA 19403

PRELIMINARY PLAN (Not To Be Recorded)

POST CONSTRUCTION STORMWATER MANAGEMENT (PCSM) PLAN

MARKLEY FARM PROPERTY

WEST NORRITON TOWNSHIP – MONTGOMERY COUNTY – PENNSYLVANIA

WOODROW & ASSOCIATES, INC.
MUNICIPAL CIVIL CONSULTING ENGINEERS
1109 North Bethlehem Pike, Suite 207 Lansdale, PA 19002
Phone: (215) 542-9548 Fax: (215) 542-5679
Web: www.woodrowinc.com

Layer List: Sht33_PostCon

Plan Date: NOV 06, 2015

Job No: 11-0410 D

Design Mgr: J.H.K.

Proj. Mgr: T.P.W.

Sheet No: 33 of 34

Project No: 11-0410 D Project Name: MARKLEY FARM PROPERTY Print Date: Nov 2, 2015 (14:30)

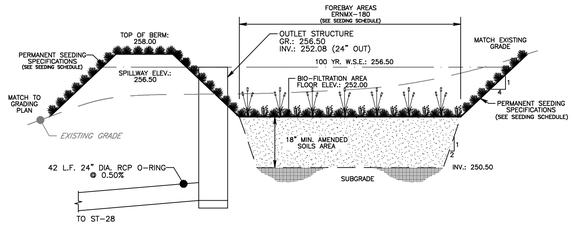

PERMANENT SEEDING SPECIFICATION – FORMULA B:

70% Tall Fescue (Festuca Arunoinacea var., Kentucky 31):	15.0 lbs./1,000 s.y.
30% Creeping Red Fescue or Chewings Fescue:	6.0 lbs./1,000 s.y.

SEEDING RATES FOR THE ABOVE MIXTURES:

Spread seeds where indicated and at the rates specified above (and Table A, Pub 408, Section 804). Spread seeds within the following dates, or as otherwise indicated or directed:

- Formula B: – March 15 to June 01
  August 01 to October 15
- Formula E: – March 15 to October 15

Extend seeding dates where project conditions warrant. Apply full treatment or apply only 50% of the permanent seeding and soil supplements and apply the remaining 50% within the next seeding dates.

Place mulch, hay or straw immediately after seeding or within 48 hours after seeding is completed. Place hay or straw uniformly, in a continuous blanket, at a rate of 1,200 lbs./1,000 s.y. If directed, increase the rate of application, depending upon the material used, season, soil conditions or method of application.

ERNST MIX 180 – RAIN GARDEN MIX

20.00%	*Panicum rigidulum*	Redtop Panic Grass
20.00%	*Schizachyrium scoparium*	Little Bluestem
10.00%	*Elymus virginicus*	Virginia Wild Rye
5.00%	*Carex vulpinoidea*	Fox Sedge
5.00%	*Chasmanthium latifolium*	River Oats
5.00%	*Echinacea purpurea*	Purple Coneflower
5.00%	*Liatris spicata*	Marsh (Dense) Blazing Star
5.00%	*Rudbeckia hirta*	Black Eyed Susan
3.00%	*Monarda fistulosa*	Wild Bergamot
3.00%	*Penstemon digitalis*	Tall White Beard Tongue
2.00%	*Andropogon gerardii*	Big Bluestem
2.00%	*Asclepias incarnata*	Swamp Milkweed
2.00%	*Aster novae-angliae*	New England Aster
2.00%	*Baptisia australis*	Blue False Indigo
2.00%	*Geum laciniatum*	Rough Avens
2.00%	*Lobelia siphilitica*	Great Blue
2.00%	*Tradescantia ohiensis*	Ohio Spiderwort
2.00%	*Verbena hastata*	Blue Vervain
2.00%	*Zizia aurea*	Golden Alexanders
1.00%	*Agrostis perennans*	Autumn Bentgrass

Seeding Rate: 15 lb per acre, or 1/3–1/2 lb per 1,000 sq ft

Used where water quality, wildflower beauty, and wildlife are important. This mix should only be mowed during the dormant season.

AMENDED SOILS MIX – AS SHOWN IN THE CHESAPEAKE RESEARCH CONSORTIUM 'DESIGN OF STORM WATER FILTERING SYSTEMS' REPORT

10% to 25%	Clay
30% to 55%	Silt
30% to 60%	Sand

BIO–FILTRATION BASIN AREA

Not To Scale

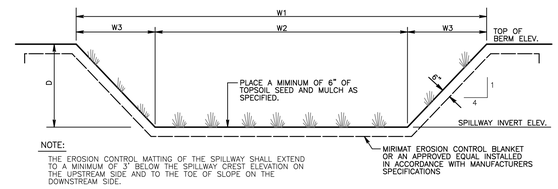

NOTE:
THE EROSION CONTROL MATTING OF THE SPILLWAY SHALL EXTEND TO A MINIMUM OF 3' BELOW THE SPILLWAY CREST ELEVATION ON THE UPSTREAM SIDE AND TO THE TOE OF SLOPE ON THE DOWNSTREAM SIDE.

DETENTION BASIN SPILLWAY INFORMATION

DETENTION BASIN NUMBER	W1 (FT.)	W2 (FT.)	W3 (FT.)	D (FT.)	TOP OF BERM ELEV.	SPILLWAY INVERT ELEV.
A					236.0	
B					239.5	
C					230.0	

GRASS DETENTION BASIN EMERGENCY SPILLWAY

Not To Scale

REVISIONS

No.:	DATE:	DESCRIPTION:

COMMONWEALTH OF PENNSYLVANIA
REGISTERED PROFESSIONAL
TIMOTHY P. WOODROW
ENGINEER
No. 036735-E

0"

CONSTRUCTION PLANS TO BE PREPARED BY A REGISTERED PROFESSIONAL ENGINEER.
THIS PLAN HAS BEEN PREPARED SPECIFICALLY FOR THE APPLICANT NAMED HEREIN AND IS NOT TRANSFERABLE TO ANY OTHER PERSON.
© COPYRIGHT 2015 WOODROW & ASSOCIATES, INC. – ALL RIGHTS RESERVED
DUPLICATION OR USE WITHOUT WRITTEN CONSENT OF WOODROW & ASSOCIATES, INC. IS PROHIBITED BY LAW.

Parcel Information:
TP 63-00-01109-008
Block-Unit:
Deed Bk: 5658
Pg: 2573
Gross Tract:
55.5618 Acres

Record Owner:
DORIS Y & RONALD W MARKLEY REVOCABLE TRUST
2100 Stump Road
Norristown, PA 19403

Applicant:
Mikelen, LLC
Attn: Lee DeGrippo
2100 Stump Road
Norristown, PA 19403

PRELIMINARY PLAN (Not To Be Recorded)

POST CONSTRUCTION STORMWATER MANAGEMENT SPECIFICATIONS

MARKLEY FARM PROPERTY

WEST NORRITON TOWNSHIP – MONTGOMERY COUNTY – PENNSYLVANIA

WOODROW & ASSOCIATES, INC.
MUNICIPAL CIVIL CONSULTING ENGINEERS
1108 Mattlehill Drive, Suite 5 Lansdale, PA 19002
Phone: (215) 542-5648 Fax: (215) 542-5679
Web: www.woodrowinc.com

Layer List:
Sht34_Post-Spec
Plan Date:
NOV 06, 2015
Job No:
11–0410 D
Design Mgr:
J.H.K.
Proj. Mgr:
T.P.W.
Sheet No:
34
of 34

Project No: 11-0410 D Project Name: MARKLEY FARM PROPERTY Print Date: Nov 2, 2015 (14:25)